ANNEX for ATV71 - Quick Start Guide

S1B8698802

Short-Circuit Current Ratings (SCCR) and branch circuit protection

The combinations in the tables have been tested per UL508C (Reference UL file E116875).
These ratings are in addition to ratings on the nameplate of the product.
The values for the overcurrent protection devices are the maximum allowable amp size. Smaller amp ratings may be used.
Integral solid state short circuit protection does not provide branch circuit protection. Branch circuit protection must be provided in accordance with the National Electrical Code and any additional local codes.
The devices are provided with software integral overload and over speed protection for the motor. Protection at 110% of the full load motor current. The motor thermal protection current (ItH) must be set to the rated current indicated on the motor nameplate. (For detail see the programming manual).

75°C (167 °F) copper conductor with the AWG wire size for all products, except ATV71HC13N4● to ATV71HC50N4●, ATV71HC11Y to ATV71HC63Y: 60°C (140°F) / 75°C (167 °F) copper conductor with the AWG wire size.

Suitable for use on a circuit capable of delivering not more than___**X**___rms symmetrical kiloAmperes,___**Y**___Volts maximum, when protected by___**Z1**___with a maximum rating of___**Z2**___.

Altivar 71								Short Circuit Current Ratings [2]													
								with Circuit Breaker [3]			with GV●P [3]					with Fuses [3]			with Fuses and Type 1 kit [4]		
Input Voltage 50/60 Hz **Y**	(kW)	(HP)	(A)	Reference:	Input Rating: (kA)[1]	Minimum Inductance (mH)	Line Reactor Reference	PowerPact [5] **Z1, Z2**	SCCR (kA) **X**	Minimum Enclosure Volume (in^3)	GV●P Type E [6] **Z1, Z2**	GV●P Voltage Rating (V)	GV●P Maximum Power (HP)	SCCR (kA) **X**	Minimum enclosure Volume (in^3)	Fuse Ampere Rating (A) **Z1, Z2**	SCCR (kA) **X**	Minimum enclosure Volume (in^3)	Fuse Ampere Rating (A) **Z1, Z2**	SCCR (kA) **X**	Minimum enclosure Volume (in^3)
Single-phase Input, without line reactor																					
200/240V Single-phase	0.37	0.5	3	ATV71H075M3	5	-	-	HJL36015	5	4017	-	-	-	5	1600	15 [7]	5	1078	15 [7]	5	1078
	0.75	1	4.8	ATV71HU15M3	5	-	-	HJL36025	5	4017	GV2P14	240	1	5	1600	25 [7]	5	1078	25 [7]	5	1078
	1.5	2	8	ATV71HU22M3	5	-	-	HJL36035	5	4017	GV3P18	240	3	5	4017	35 [7]	5	1550	25 [7]	5	1550
	2.2	3	11	ATV71HU30M3	5	-	-	HJL36035	5	4017	GV3P18	240	3	5	1920	35 [7]	5	1550	40 [7]	5	1550
	4	5	17.5	ATV71HU75M3	5	-	-	HJL36110	5	6528	GV3P50	240	7.5	5	4032	110 [7]	5	2719	70 [7]	5	2719
	6	7.5	27.5	ATV71HD15M3X	5	-	-	HJL36150	5	6528	GV3P65	240	10	5	5760	150 [7]	5	4036	110 [7]	5	4036
	8	10	33	ATV71HD18M3X	5	-	-	JJL36175	5	13215	-	-	-	-	-	175 [7]	5	4900	125 [7]	5	4900
	11	15	54	ATV71HD30M3X	5	-	-	JJL36250	5	13215	-	-	-	-	-	250 [7]	5	9640	200 [7]	5	9640
	15	20	66	ATV71HD37M3X	5	-	-	JJL36250	5	13215	-	-	-	-	-	250 [7]	5	9640	225 [7]	5	9640
	18	25	75	ATV71HD45M3X	10	-	-	-	-	-	-	-	-	-	-	300 [7]	10	9640	300 [7]	10	9640
Single-phase Input, with line reactor																					
200/240V Single-phase	3	-	13.7	ATV71HU40M3	5	1	RL02502	HJL36060	5	6528	GV3P25	240	3	5	1920	60 [7]	5	1550	45 [7]	5	1550
	4	5	17.5	ATV71HU55M3	5	0.8	RL03502	HJL36080	5	6528	GV3P40	240	5	5	2880	80 [7]	5	1987	60 [7]	5	1987
	6	7.5	27.5	ATV71HU75M3	22	0.5	RL05502	HJL36110	22	6528	GV3P50	240	7.5	22	4032	110 [7]	22	2719	70 [7]	22	2719
	8	10	33	ATV71HD15M3X	22	0.4	RL08002	HJL36150	22	6528	GV3P65	240	10	22	5760	150 [7]	22	4036	110 [7]	22	4036
	11	15	54	ATV71HD22M3X	22	0.3	RL10002	JJL36200	22	13215	-	-	-	-	-	200 [7]	22	4900	150 [7]	22	4900
	15	20	66	ATV71HD30M3X	22	0.2	RL13002	JJL36250	22	13215	-	-	-	-	-	250 [7]	22	9640	200 [7]	22	9640
	18	25	75	ATV71HD37M3X	22	0.15	RL16002	JJL36250	22	13215	-	-	-	-	-	250 [7]	22	9640	225 [7]	22	9640
	22	30	88	ATV71HD45M3X	22	0.185	RL20003B14	LAL36400	22	8640	-	-	-	-	-	300 [7]	22	9640	300 [7]	22	9640

Footnotes are on page 5.

Altivar 71								Short Circuit Current Ratings [2]													
								with Circuit Breaker [3]			with GV●P [3]					with Fuses [3]			with Fuses and Type 1 kit [4]		
Input Voltage 50/60 Hz **Y**	(kW)	(HP)	(A)	Reference:	Input Rating: (kA)[1]	Minimum Inductance (mH)	Line Reactor Reference	PowerPact [5] **Z1, Z2**	SCCR (kA) **X**	Minimum Enclosure Volume (in^3)	GV●P Type E [6] **Z1, Z2**	GV●P Voltage Rating (V)	GV●P Maximum Power (HP)	SCCR (kA) **X**	Minimum enclosure Volume (in^3)	Fuse Ampere Rating (A) **Z1, Z2**	SCCR (kA) **X**	Minimum enclosure Volume (in^3)	Fuse Ampere Rating (A) **Z1, Z2**	SCCR (kA) **X**	Minimum enclosure Volume (in^3)
Three-phase Input, without line reactor																					
200/240V Three-phase	0.37	0.5	3	ATV71H037M3	5	-	-	HJL36015	5	4017	GV2P08	240	1	5	1600	15 [7]	5	4017	7 [8]	5	1078
	0.75	1	4.8	ATV71H075M3	5	-	-	HJL36015	5	4017	GV2P10	240	1.5	5	1600	15 [7]	5	4017	15 [7]	5	1078
	1.5	2	8	ATV71HU15M3	5	-	-	HJL36025	5	4017	GV2P14	240	3	5	1600	25 [7]	5	4017	25 [7]	5	1078
	2.2	3	11	ATV71HU22M3	5	-	-	HJL36035	5	4017	GV3P18	240	5	5	1920	35 [7]	5	4017	25 [7]	5	1550
	3	-	13.7	ATV71HU30M3	5	-	-	HJL36035	5	4017	GV3P18	240	3	5	1920	35 [7]	5	4017	40 [7]	5	1550
	4	5	17.5	ATV71HU40M3	5	-	-	HJL36060	5	4017	GV3P25	240	7.5	5	1920	60 [7]	5	4017	45 [7]	5	1550
	6	7.5	27.5	ATV71HU55M3	22	-	-	HJL36080	22	6528	GV3P40	240	10	5	2880	80 [7]	22	6528	60 [7]	5	1987
	8	10	33	ATV71HU75M3	22	-	-	HJL36110	22	6528	GV3P50	240	10	5	4032	110 [7]	22	6528	70 [7]	5	2719
	11	15	54	ATV71HD11M3X	22	-	-	HJL36110	22	6528	GV3P50	240	10	5	5760	110 [7]	22	6528	90 [7]	5	4036
	15	20	66	ATV71HD15M3X	22	-	-	HJL36150	22	6528	GV3P65	240	15	5	5760	150 [7]	22	6528	110 [7]	5	4036
	18	25	75	ATV71HD18M3X	22	-	-	JJL36175	22	13215	-	-	-	-	-	175 [7]	22	13215	125 [7]	5	4900
	22	30	88	ATV71HD22M3X	22	-	-	JJL36200	22	13215	-	-	-	-	-	200 [7]	22	13215	150 [7]	5	4900
	30	40	120	ATV71HD30M3X	22	-	-	JJL36250	22	13215	-	-	-	-	-	250 [7]	22	13215	200 [7]	5	9640
	37	50	144	ATV71HD37M3X	22	-	-	JJL36250	22	13215	-	-	-	-	-	250 [7]	22	13215	225 [7]	5	9640
	45	60	176	ATV71HD45M3X	22	-	-	-	-	-	-	-	-	-	-	-	-	-	300 [7]	10	9640
380/480V Three-phase	0.75	1	2.3	ATV71H075N4	5	-	-	HLL36015	5	4017	GV2P08	480Y/277	2	5	1600	15 [8]	5	4017	6 [8]	5	1078
	1.5	2	4.1	ATV71HU15N4	5	-	-	HLL36015	5	4017	GV2P10	480Y/277	4	5	1600	15 [8]	5	4017	12 [8]	5	1078
	2.2	3	5.8	ATV71HU22N4	5	-	-	HLL36015	5	4017	GV2P14	480Y/277	5	5	1600	15 [7]	5	4017	15 [7]	5	1078
	3	-	7.8	ATV71HU30N4	5	-	-	HLL36015	5	4017	GV2P14	480Y/277	5	5	1920	15 [7]	5	4017	17.5 [7]	5	1550
	4	5	10.5	ATV71HU40N4	5	-	-	HLL36025	5	4017	GV3P13	480Y/277	7.5	5	1920	25 [7]	5	4017	25 [7]	5	1550
	5.5	7.5	14.3	ATV71HU55N4	22	-	-	HLL36040	22	6528	GV3P25	480Y/277	15	5	2880	40 [7]	22	6528	40 [7]	5	1987
	7.5	10	17.6	ATV71HU75N4	22	-	-	HLL36050	22	6528	GV3P25	480Y/277	15	5	2880	50 [7]	22	6528	40 [7]	5	1987
	11	15	27.7	ATV71HD11N4	22	-	-	HLL36070	22	6528	GV3P40	480Y/277	25	5	4032	70 [7]	22	6528	60 [7]	5	2719
	15	20	33	ATV71HD15N4	22	-	-	HLL36100	22	6528	GV3P50	480Y/277	30	5	5760	100 [7]	22	6528	70 [7]	5	4036
	18	25	41	ATV71HD18N4	22	-	-	HLL36090	22	6528	GV3P50	480Y/277	30	5	8640	90 [7]	22	6528	70 [7]	5	4036
	22	30	48	ATV71HD22N4	22	-	-	HLL36100	22	6528	GV3P50	480Y/277	30	5	8640	100 [7]	22	6528	80 [7]	5	4900
	30	40	66	ATV71HD30N4	22	-	-	HLL36125	22	6528	GV3P65	480Y/277	40	5	10368	125 [7]	22	6528	90 [7]	5	7230
	37	50	79	ATV71HD37N4	22	-	-	HLL36150	22	13215	-	-	-	-	-	150 [7]	22	13215	110 [7]	5	7230
	45	60	94	ATV71HD45N4	22	-	-	JLL36200	22	13215	-	-	-	-	-	200 [7]	22	13215	150 [7]	10	12044
	55	75	116	ATV71HD55N4	22	-	-	JLL36225	22	13215	-	-	-	-	-	225 [7]	22	13215	175	10	12044
	75	100	160	ATV71HD75N4	22	-	-	JLL36250	22	38250	-	-	-	-	-	250 [7]	22	38250	225 [7]	10	12044
	75	100	160	ATV71HD75N4	22	-	-	KCL34250	22	38250	-	-	-	-	-	250 [7]	22	38250	225 [7]	10	12044

Footnotes are on page 5.

Altivar 71								Short Circuit Current Ratings [2]													
								with Circuit Breaker [3]			with GV●P [3]					with Fuses [3]			with Fuses and Type 1 kit [4]		
Input Voltage 50/60 Hz **Y**	(kW)	(HP)	(A)	Reference:	Input Rating: (kA)[1]	Minimum Inductance (mH)	Line Reactor Reference	PowerPact [5] **Z1, Z2**	SCCR (kA) **X**	Minimum Enclosure Volume (in^3)	GV●P Type E [6] **Z1, Z2**	GV●P Voltage Rating (V)	GV●P Maximum Power (HP)	SCCR (kA) **X**	Minimum enclosure Volume (in^3)	Fuse Ampere Rating (A) **Z1, Z2**	SCCR (kA) **X**	Minimum enclosure Volume (in^3)	Fuse Ampere Rating (A) **Z1, Z2**	SCCR (kA) **X**	Minimum enclosure Volume (in^3)
Three-phase Input, without line reactor																					
575V Three-phase	1.5	2	2.7	ATV71HU15S6X	22	-	-	-	-	-	-	-	-	-	-	6[7]	22	3898	10[7]	22	3898
	2.2	3	3.9	ATV71HU22S6X	22	-	-	-	-	-	-	-	-	-	-	6[7]	22	3898	10[7]	22	3898
	3	-	5.8	ATV71HU30S6X	22	-	-	-	-	-	-	-	-	-	-	6[7]	22	3898	15[7]	22	3898
	4	5	6.1	ATV71HU40S6X	22	-	-	-	-	-	-	-	-	-	-	10[7]	22	3898	15[7]	22	3898
	5.5	7.5	9	ATV71HU55S6X	22	-	-	-	-	-	-	-	-	-	-	15[7]	22	3898	20[7]	22	3898
	7.5	10	11	ATV71HU75S6X	22	-	-	-	-	-	-	-	-	-	-	20[7]	22	3898	25[7]	22	3898
500/600V Three-phase	1.5	2	2.7	ATV71HU22Y	22	-	-	-	-	-	-	-	-	-	-	-	-	-	10[7]	22	8640
	2.2	3	3.9	ATV71HU30Y	22	-	-	-	-	-	-	-	-	-	-	-	-	-	10[7]	22	8640
	3	-	5.8	ATV71HU40Y	22	-	-	-	-	-	-	-	-	-	-	-	-	-	10[7]	22	8640
	4	5	6.1	ATV71HU55Y	22	-	-	-	-	-	-	-	-	-	-	-	-	-	15[7]	22	8640
	5.5	7.5	9	ATV71HU75Y	22	-	-	-	-	-	-	-	-	-	-	-	-	-	20[7]	22	8640
	7.5	10	11	ATV71HD11Y	22	-	-	-	-	-	-	-	-	-	-	-	-	-	25[7]	22	8640
	11	15	17	ATV71HD15Y	22	-	-	-	-	-	-	-	-	-	-	-	-	-	35[7]	22	8640
	15	20	22	ATV71HD18Y	22	-	-	-	-	-	-	-	-	-	-	-	-	-	45[7]	22	8640
	18.5	25	27	ATV71HD22Y	22	-	-	-	-	-	-	-	-	-	-	-	-	-	60[7]	22	8640
	22	30	32	ATV71HD30Y	22	-	-	-	-	-	-	-	-	-	-	-	-	-	60[7]	22	8640
	30	40	41	ATV71HD37Y	22	-	-	-	-	-	-	-	-	-	-	-	-	-	90[7]	22	9792
	37	50	52	ATV71HD45Y	22	-	-	-	-	-	-	-	-	-	-	-	-	-	100[7]	22	9792
	45	60	62	ATV71HD55Y	22	-	-	-	-	-	-	-	-	-	-	-	-	-	125[7]	22	9792
	55	75	77	ATV71HD75Y	22	-	-	-	-	-	-	-	-	-	-	-	-	-	150[7]	22	9792
	75	100	99	ATV71HD90Y	22	-	-	-	-	-	-	-	-	-	-	-	-	-	175[7]	22	9792
Three-phase Input, with line reactor																					
200/240V Three-phase	0.37	0.5	3	ATV71H037M3	5	3	RL00401	HJL36015	100	4017	GV2P08	240	1	65	1600	15[7]	100	4017	7[8]	5	1078
	0.75	1	4.8	ATV71H075M3	5	1.5	RL00401	HJL36015	100	4017	GV2P10	240	1.5	65	1600	15[7]	100	4017	15[7]	5	1078
	1.5	2	8	ATV71HU15M3	5	1.25	RL00801	HJL36025	100	4017	GV2P14	240	3	65	1600	25[7]	100	4017	25[7]	5	1078
	2.2	3	11	ATV71HU22M3	5	0.8	RL01201	HJL36035	100	4017	GV3P18	240	5	65	1920	35[7]	100	4017	25[7]	5	1550
	3	-	13.7	ATV71HU30M3	5	0.8	RL01801	HJL36035	100	4017	GV3P18	240	5	65	1920	35[7]	100	4017	40[7]	5	1550
	4	5	17.5	ATV71HU40M3	5	0.5	RL01801	HJL36060	100	4017	GV3P25	240	7.5	65	1920	60[7]	100	4017	45[7]	5	1550
	6	7.5	27.5	ATV71HU55M3	22	0.4	RL02501	HJL36080	100	6528	GV3P40	240	10	65	2880	80[7]	100	6528	60[7]	5	1987
	8	10	33	ATV71HU75M3	22	0.3	RL03501	HJL36110	100	6528	GV3P50	240	10	65	4032	110[7]	100	6528	70[7]	5	2719
	11	15	54	ATV71HD11M3X	22	0.25	RL04501	HJL36110	100	6528	GV3P50	240	10	65	5760	110[7]	100	6528	90[7]	5	4036
	15	20	66	ATV71HD15M3X	22	0.2	RL05501	HJL36150	100	6528	GV3P65	240	15	65	5760	150[7]	100	6528	110[7]	5	4036
	18	25	75	ATV71HD18M3X	22	0.15	RL08001	JJL36175	100	13215	-	-	-	-	-	175[7]	100	13215	125[7]	5	4900
	22	30	88	ATV71HD22M3X	22	0.1	RL10001	JJL36200	100	13215	-	-	-	-	-	200[7]	100	13215	150[7]	5	4900
	30	40	120	ATV71HD30M3X	22	0.075	RL13001	JJL36250	100	13215	-	-	-	-	-	250[7]	100	13215	200[7]	5	9640
	37	50	144	ATV71HD37M3X	22	0.055	RL16001	JJL36250	100	13215	-	-	-	-	-	250[7]	100	13215	225[7]	5	9640
	45	60	176	ATV71HD45M3X	22	0.055	RL20001	LAL36400	22	8640	-	-	-	-	-	400[7]	22	8640	300[7]	10	9640

Footnotes are on page 5.

Altivar 71								Short Circuit Current Ratings [2]													
								with Circuit Breaker [3]			with GV●P [3]					with Fuses [3]			with Fuses and Type 1 kit [4]		
Input Voltage 50/60 Hz **Y**	(kW)	(HP)	(A)	Reference:	Input Rating: (kA)[1]	Minimum Inductance (mH)	Line Reactor Reference	PowerPact [5] **Z1, Z2**	SCCR (kA) **X**	Minimum Enclosure Volume (in^3)	GV●P Type E [6] **Z1, Z2**	GV●P Voltage Rating (V)	GV●P Maximum Power (HP)	SCCR (kA) **X**	Minimum enclosure Volume (in^3)	Fuse Ampere Rating (A) **Z1, Z2**	SCCR (kA) **X**	Minimum enclosure Volume (in^3)	Fuse Ampere Rating (A) **Z1, Z2**	SCCR (kA) **X**	Minimum enclosure Volume (in^3)
Three-phase Input, with line reactor																					
380/480V Three-phase	0.75	1	2.3	ATV71H075N4	5	12	RL00201	HLL36015	100	4017	GV2P08	480Y/277	2	65	1600	15 [7]	100	4017	6 [8]	100	1078
	1.5	2	4.1	ATV71HU15N4	5	6.5	RL00402	HLL36015	100	4017	GV2P10	480Y/277	4	65	1600	15 [7]	100	4017	12 [8]	100	1078
	2.2	3	5.8	ATV71HU22N4	5	6.5	RL00402	HLL36015	100	4017	GV2P14	480Y/277	5	65	1600	15 [7]	100	4017	15 [7]	100	1078
	3	-	7.8	ATV71HU30N4	5	3	RL00802	HLL36015	100	4017	GV2P14	480Y/277	5	65	1920	15 [7]	100	4017	17.5 [7]	100	1550
	4	5	10.5	ATV71HU40N4	5	3	RL00802	HLL36025	100	4017	GV3P13	480Y/277	7.5	65	1920	25 [7]	100	4017	25 [7]	100	1550
	5.5	7.5	14.3	ATV71HU55N4	22	2.5	RL01202	HLL36040	100	6528	GV3P25	480Y/277	15	65	2880	40 [7]	100	6528	40 [7]	100	1987
	7.5	10	17.6	ATV71HU75N4	22	1.5	RL01802	HLL36050	100	6528	GV3P25	480Y/277	15	65	2880	50 [7]	100	6528	40 [7]	100	1987
	11	15	27.7	ATV71HD11N4	22	1.2	RL02502	HLL36070	100	6528	GV3P40	480Y/277	25	65	4032	70 [7]	100	6528	-	-	-
	15	20	33	ATV71HD15N4	22	0.8	RL03502	HLL36100	100	6528	GV3P50	480Y/277	30	65	5760	100 [7]	100	6528	70 [7]	100	4036
	18	25	41	ATV71HD18N4	22	0.8	RL03502	HLL36090	100	6528	GV3P50	480Y/277	30	65	8640	90 [7]	100	6528	70 [7]	100	4036
	22	30	48	ATV71HD22N4	22	0.7	RL04502	HLL36100	100	6528	GV3P50	480Y/277	30	65	8640	100 [7]	100	6528	80 [7]	100	4900
	30	40	66	ATV71HD30N4	22	0.5	RL05502	HLL36125	100	6528	GV3P65	480Y/277	40	65	10368	125 [7]	100	6528	90 [7]	100	7230
	37	50	79	ATV71HD37N4	22	0.4	RL08002	HLL36150	100	13215	-	-	-	-	-	150 [7]	100	13215	110 [7]	100	7230
	45	60	94	ATV71HD45N4	22	0.4	RL08002	JLL36200	100	13215	-	-	-	-	-	200 [7]	100	13215	150 [7]	100	12044
	55	75	116	ATV71HD55N4	22	0.3	RL10002	JLL36225	100	13215	-	-	-	-	-	225 [7]	100	13215	175 [7]	100	12044
	75	100	160	ATV71HD75N4	22	0.2	RL13002	JLL36250	100	38250	-	-	-	-	-	250 [7]	100	38250	225 [7]	100	12044
	75	100	160	ATV71HD75N4	22	0.2	RL13002	KCL34250	100	38250	-	-	-	-	-	250 [7]	100	38250	225 [7]	100	12044
575V Three-phase	1.5	2	2.7	ATV71HU15S6X	22	9.0	RL00403	HLL36015	50	3898	-	-	-	-	-	6 [7]	100	3898	10 [7]	22	3898
	2.2	3	3.9	ATV71HU22S6X	22	9.0	RL00403	HLL36015	50	3898	-	-	-	-	-	6 [7]	100	3898	10 [7]	22	3898
	3	-	5.8	ATV71HU30S6X	22	9.0	RL00403	HLL36015	50	3898	-	-	-	-	-	6 [7]	100	3898	15 [7]	22	3898
	4	5	6.1	ATV71HU40S6X	22	5.0	RL00803	HLL36015	50	3898	-	-	-	-	-	10 [7]	100	3898	15 [7]	22	3898
	5.5	7.5	9	ATV71HU55S6X	22	3	RL01203	HLL36020	50	3898	-	-	-	-	-	15 [7]	100	3898	20 [7]	22	3898
	7.5	10	11	ATV71HU75S6X	22	2.5	RL01203	HLL36025	50	3898	-	-	-	-	-	20 [7]	100	3898	25 [7]	22	3898
500/600V Three-phase	1.5	2	2.7	ATV71HU22Y	22	9.0	RL00403	-	-	-	-	-	-	-	-	6 [8]	100	8640	10 [7]	100	8640
	2.2	3	3.9	ATV71HU30Y	22	9.0	RL00403	-	-	-	-	-	-	-	-	10 [7]	100	8640	10 [7]	100	8640
	3	-	5.8	ATV71HU40Y	22	5.0	RL00803	-	-	-	-	-	-	-	-	10 [7]	100	8640	15 [7]	100	8640
	4	5	6.1	ATV71HU55Y	22	5.0	RL00803	-	-	-	-	-	-	-	-	15 [7]	100	8640	15 [7]	100	8640
	5.5	7.5	9	ATV71HU75Y	22	3	RL00802	-	-	-	-	-	-	-	-	20 [7]	100	8640	20 [7]	100	8640
	7.5	10	11	ATV71HD11Y	22	2.5	RL01202	-	-	-	-	-	-	-	-	25 [7]	100	8640	25 [7]	100	8640
	11	15	17	ATV71HD15Y	22	1.5	RL01802	-	-	-	-	-	-	-	-	35 [7]	100	8640	35 [7]	100	8640
	15	20	22	ATV71HD18Y	22	1.2	RL02502	-	-	-	-	-	-	-	-	45 [7]	100	8640	45 [7]	100	8640
	18.5	25	27	ATV71HD22Y	22	1.2	RL02502	-	-	-	-	-	-	-	-	60 [7]	100	8640	60 [7]	100	8640
	22	30	32	ATV71HD30Y	22	0.8	RL03502	-	-	-	-	-	-	-	-	60 [7]	100	8640	60 [7]	100	8640
	30	40	41	ATV71HD37Y	22	0.7	RL04502	-	-	-	-	-	-	-	-	90 [7]	100	9792	90 [7]	100	9792
	37	50	52	ATV71HD45Y	22	0.5	RL05502	-	-	-	-	-	-	-	-	100 [7]	100	9792	100 [7]	100	9792
	45	60	62	ATV71HD55Y	22	0.4	RL08002	-	-	-	-	-	-	-	-	125 [7]	100	9792	125 [7]	100	9792
	55	75	77	ATV71HD75Y	22	0.4	RL08002	-	-	-	-	-	-	-	-	150 [7]	100	9792	150 [7]	100	9792
	75	100	99	ATV71HD90Y	22	0.3	RL10002	-	-	-	-	-	-	-	-	175 [7]	100	9792	175 [7]	100	9792

Footnotes are on page 5.

1. This column shows the maximum prospective short circuit current value that cannot be exceeded without adding input impedance.
Electrical distribution systems with a higher prospective short circuit current will cause higher input currents in the front end of the drive.
It is possible for the tested SCCR rating of the drive to be lower than this Input rating. The tested SCCR rating can be higher than this input rating when a line reactor is used.

2. An ATV71 output short circuit test was performed for 100 kA. In addition to providing a rating based on shorting the output of the drive, these short circuit rating have been obtained by shorting components internal to the Altivar 71. These ratings allow proper coordination of short circuit protection. The integral solid state short circuit protection in the drive does not provide branch circuit protection. Branch circuit protection must be provided in accordance with the National Electrical Code and any local codes. The listed line reactor or minimum impedance is required to obtain ratings above the Input Rating.

3. Ratings apply to an Altivar 71 mounted in a non-ventilated Type 1, 3R, 4(X) or 12 rated enclosure. Use noted ratings when using a Type 1 conduit kit. Minimum enclosure volume allows for the specified SCCR. Your application specific thermal requirements may require a larger enclosure.

4. The fuse ratings in this column are for an Altivar 71 drive installed with a VW3A92●●●● Type 1 conduit kit. These fuse ratings in this column can also apply to Altivar 71 drive installed in a Type 1, 3R, 4(X) or 12 rated enclosure that has a minimum volume listed in the table.

5. Circuit breakers with lower interrupt ratings can be used within the same circuit breaker frame rating. For 200 / 240 Vac, replace with HGL or JGL for 65kA interrupt rating. For 380 / 480 Vac, replace with HGL or JGL for 35kA or HJL or JJL for 65kA interrupt rating. For 500 / 600 Vac, replace with HJL for 25kA or HGL for 18kA, or HDL for 14kA interrupt rating.

6. 480 V ratings are for Wye connected electrical distribution systems only.
GV2P●● self protected manual combination starter must be used with GV2GH7 insulating barrier to meet UL 508 Type E rating
GV3P●● self protected manual combination starter must be used with GV3G66 + GVAM11 insulating barrier to meet UL 508 Type E rating

7. Use fast acting fuse or time delay Class J

8. Fuse type Class CC

Altivar 71								Short Circuit Current Ratings [2]													
								with Circuit Breaker [3]			with GV●P [3]					with Fuses [3]			with Fuses and Type 1 kit [4]		
Input Voltage 50/60 Hz **Y**	(kW)	(HP)	(A)	Reference:	Input Rating: (kA)[1]	Minimum Inductance (mH)	Line Reactor Reference	PowerPact **Z1, Z2**	SCCR (kA) **X**	Minimum Enclosure Volume (in^3)	GV●P Type E [6] **Z1, Z2**	GV●P Voltage Rating (V)	GV●P Maximum Power (HP)	SCCR (kA) **X**	Minimum enclosure Volume (in^3)	Fuse Ampere Rating (A) **Z1, Z2**	SCCR (kA) **X**	Minimum enclosure Volume (in^3)	Fuse Ampere Rating (A) **Z1, Z2**	SCCR (kA) **X**	Minimum enclosure Volume (in^3)
Three-phase Input, without line reactor																					
200/240V Three-phase	55	75	221	ATV71HD55M3X	35	-	-	-	-	-	-	-	-	-	-	350[6]	10	22749	350[6]	10	22749
	75	100	285	ATV71HD75M3X	35	-	-	-	-	-	-	-	-	-	-	450[6]	10	28416	450[6]	10	28416
380/480V Three-phase	90	125	179	ATV71HD90N4	35	-	-	LIL36300 or LLL36400	35	45900	-	-	-	-	-	300[7]	35	45900	250[7]	10	22749
	110	150	215	ATV71HC11N4	35	-	-	LIL36300 or LLL36400	35	45900	-	-	-	-	-	300[7]	35	45900	300[7]	10	28416
	132	200	259	ATV71HC13N4	35	-	-	LIL36400	35	45900	-	-	-	-	-	400[6]	35	45900	350[6]	10	31117
	160	250	314	ATV71HC16N4	50	-	-	-	-	-	-	-	-	-	-	400[5]	50	45900	400[6]	18	40250
	250	300	387	ATV71HC20N4	50	-	-	-	-	-	-	-	-	-	-	500[5]	50	53550	500[6]	18	54450
	250	400	481	ATV71HC25N4	50	-	-	-	-	-	-	-	-	-	-	600[5]	50	53550	600[6]	18	54450
	280	450	550	ATV71HC28N4	50	-	-	-	-	-	-	-	-	-	-	600[5]	50	53550	700[6]	30	54450
	315	500	616	ATV71HC31N4	30	-	-	-	-	-	-	-	-	-	-	800[6]	30	95579	-	-	-
	400	600	759	ATV71HC40N4	30	-	-	-	-	-	-	-	-	-	-	2 x 500[7, 9]	30	95579	-	-	-
	500	700	941	ATV71HC50N4	42	-	-	-	-	-	-	-	-	-	-	2 x 600[7, 9]	42	120265	-	-	-

Footnotes are on page 8.

Altivar 71								Short Circuit Current Ratings [2]													
								with Circuit Breaker [3]			with GV●P [3]					with Fuses [3]			with Fuses and Type 1 kit [4]		
Input Voltage 50/60 Hz **Y**	(kW)	(HP)	(A)	Reference:	Input Rating: (kA)[1]	Minimum Inductance (mH)	Line Reactor Reference	PowerPact **Z1, Z2**	SCCR (kA) **X**	Minimum Enclosure Volume (in^3)	GV●P Type E [6] **Z1, Z2**	GV●P Voltage Rating (V)	GV●P Maximum Power (HP)	SCCR (kA) **X**	Minimum enclosure Volume (in^3)	Fuse Ampere Rating (A) **Z1, Z2**	SCCR (kA) **X**	Minimum enclosure Volume (in^3)	Fuse Ampere Rating (A) **Z1, Z2**	SCCR (kA) **X**	Minimum enclosure Volume (in^3)
Three-phase Input, with line reactor																					
200/240V Three-phase	55	75	221	ATV71HD55M3X●[8]	35	0.045	RL25001	-	-	-	-	-	-	-	-	350 [6]	10	22749	350 [6]	10	22749
	75	100	285	ATV71HD75M3X●[8]	35	0.04	RL32001	-	-	-	-	-	-	-	-	450 [6]	10	28416	450 [6]	10	28416
380/480V Three-phase	90	125	179	ATV71HD90N4●[8]	35	0.15	RL16002	LIL36300	100	45900	-	-	-	-	-	300 [6]	100	45900	250 [6]	10	22749
	110	150	215	ATV71HC11N4●[8]	35	0.11	RL20002	LIL36300	100	45900	-	-	-	-	-	300 [6]	100	45900	300 [6]	10	28416
	132	200	259	ATV71HC13N4●[8]	35	0.09	RL25002	LIL36400	100	45900	-	-	-	-	-	400 [6]	100	45900	350 [6]	10	31117
	160	250	314	ATV71HC16N4●[8]	50	0.075	RL32002	-	-	-	-	-	-	-	-	400 [5]	100	45900	400 [6]	18	40250
	250	300	387	ATV71HC20N4●[8]	50	0.060	RL40002	-	-	-	-	-	-	-	-	500 [5]	100	53550	500 [6]	18	54450
	250	400	481	ATV71HC25N4●[8]	50	0.050	RL50002	-	-	-	-	-	-	-	-	600 [5]	100	53550	600 [6]	18	54450
	280	450	550	ATV71HC28N4●[8]	50	0.04	RL60002	-	-	-	-	-	-	-	-	600 [5]	100	53550	700 [7]	30	54450
	315	500	616	ATV71HC31N4●[8]	30	0.04	RL60002	-	-	-	-	-	-	-	-	800 [7]	30	95579	-	-	-
	400	600	759	ATV71HC40N4●[8]	30	0.03	2 x RL40002B14 [9]	-	-	-	-	-	-	-	-	2 x 500 [6, 9]	30	95579	-	-	-
	500	700	941	ATV71HC50N4●[8]	30	0.025	2 x RL50002 [9]	-	-	-	-	-	-	-	-	2 x 600 [6, 9]	30	120265	-	-	-
500/690V Three-phase	110	125	125	ATV71HC11Y	28	0.2	RL13002	-	-	-	-	-	-	-	-	200 [6]	28	31117	200 [6]	28	31117
	132	150	150	ATV71HC13Y	28	0.15	RL16002	-	-	-	-	-	-	-	-	200 [6]	28	31117	200 [6]	28	31117
	160	-	180	ATV71HC16Y	35	0.11	RL20002	-	-	-	-	-	-	-	-	250 [6]	35	31117	250 [6]	35	31117
	200	200	200 / 220	ATV71HC20Y	35	0.11	RL20002	-	-	-	-	-	-	-	-	300 [6]	35	54450	300 [6]	35	54450
	250	250	290	ATV71HC25Y	35	0.09	RL25002	-	-	-	-	-	-	-	-	400 [6]	35	54450	400 [6]	35	54450
	315	350	355	ATV71HC31Y	35	0.060	RL40002	-	-	-	-	-	-	-	-	500 [6]	35	54450	500 [6]	35	54450
	400	450	420	ATV71HC40Y	42	0.045	2 x RL25002B14 [9]	-	-	-	-	-	-	-	-	2 x 300 [6, 9]	42	120265	-	-	-
	500	550	543	ATV71HC50Y	42	0.0375	2 x RL32002B14 [9]	-	-	-	-	-	-	-	-	2 x 400 [6, 9]	42	120265	-	-	-
	630	700	675	ATV71HC63Y	42	0.03	2 x RL40002B14 [9]	-	-	-	-	-	-	-	-	2x 500 [6, 9]	42	120265	-	-	-

Footnotes are on page 8.

1. This column shows the maximum prospective short circuit current value that cannot be exceeded without adding input impedance.
Electrical distribution systems with a higher prospective short circuit current will cause higher input currents in the front end of the drive.
It is possible for the tested SCCR rating of the drive to be lower than this Input rating. The tested SCCR rating can be higher than this input rating when a line reactor is used.
Add the inductance referred in the table at the input of the drive if installing the drive on a system with higher prospective short circuit current.
A 3% (minimum) input line reactor or equivalent inductance is required for the 500..600 Vac Altivar 71s and provides the listed value with the listed fuse protection.

2. An ATV71 output short circuit test was performed for 100 kA. In addition to providing a rating based on shorting the output of the drive, these short circuit rating have been obtained by shorting components internal to the Altivar 71. These ratings allow proper coordination of short circuit protection.
Note: The integral solid state short circuit protection in the drive does not provide branch circuit protection. Branch circuit protection must be provided in accordance with the National Electrical Code and any local codes.
The listed line reactor or minimum impedance is required to obtain ratings above the Input Rating.

3. Ratings apply to an Altivar 71 mounted in a non-ventilated Type 1, 3R, 4(X) or 12 rated enclosure. Use noted ratings when using a Type 1 kit. Minimum enclosure volume allows for the specified SCCR. Your application specific thermal requirements may require a larger enclosure

4. The fuse ratings in this column are for an Altivar 71 drive installed with a VW3A92●●●● Type 1 conduit kit. Fuse type must be fast acting Class J fuses unless otherwise noted . These fuse ratings in this column can also apply to Altivar 71 drives installed in a Type 1, 3R, 4(X), or 12 rated enclosure that has a minimum volume listed in the table

5. Use Bussmann fuses Class J ref. LPJ●●●SP series, 600V max .

6. Fuse Class J / fast acting, 600V max.

7. Fuse Class T / fast acting, 600V max

8. Can be ordered **without** a DC Choke for connections to the DC BUS or when using a line reactor by adding **D** at the end of the reference.

9. The following diagrams show how to address drives with two rectifiers:

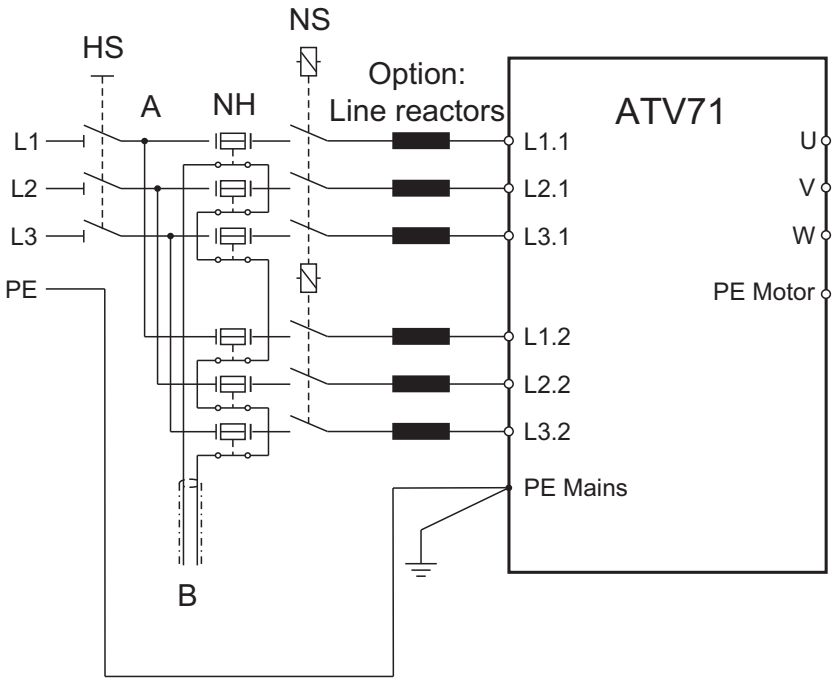

A: The ATV71 supply must be split up in front of the line reactors, if they are used.

B: The monitoring of the fuses is necessary to protect the inverter against unbalanced load. It must act on mains contactor or pulse inhibit (e.g. digital input "External fault", see Programming guide)

HS: Main switch (to be used if required according to the local regulations)
NH: Mains fuses considering table "Fuse Ampere Rating" (absolutely necessary)
NS: Mains contactor (to be used if required according to the local regulations)