European Adaptation Centre

Schneider Electric

Technical datasheet

XCKJ110513DSA9

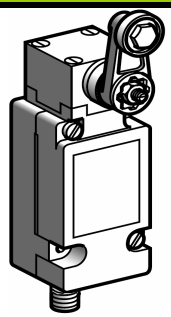

Limit switches
Osisense XC Standard, type XCKJ, form EN 50041
Metal, plug-in body + M12 connector

Environment Characteristics		
Conforming to standards	Products	IEC 60947-5-1, EN 60947-5-1,UL508, CSA C22-2 n°14
	Machine assemblies	IEC 60204-1, EN 60204-1
Product certifications		CE, UL, CSA
Protective treatment		TC
Storage temperature		-40°C to +70°C
Operation temperature		-25°C to +70°C
Vibration resistance	IEC 60068-2-6	25gn, (10 à 500Hz)
Shock resistance	IEC 60068-2-27	50gn, time 11 ms
Electric shock protection	IEC 61140, NF C 20-030	Class I
Degree of protection	IEC 60529, EN 50102	IP66 IK07
Repeat accuracy		0,01mm on the tripping points, with 1 million operating cycles
Electrical connection		M12 connector, **S**ingle **P**ole **D**ouble **T**hrow wiring
Material	Body & head	Zamak

Contact block Characteristics		
Rated operational characteristics	IEC 60947-5-1 appendix A EN 60947-5-1	AC-15 A300 (Ue = 240 V , Ie = 3A) Ithe = 10 A DC-13 Q300 (Ue = 250 V, Ie = 0,27 A)
Rated insulation voltage	EN 60947-1 UL508, CSA C22-2 N°14	Ui = 500V degree of pollution 3 Ui = 300V
Rated impulse withstand voltage	IEC60947-1, IEC 60664	U imp = 6 KV
Resistance across terminals	IEC 60255-7 category 3	< 25mohms
Short-circuit protection		10 A cartridge fuse type gG (gl)
Actuation speed		Min: 0,01m/minute, Max: 1,5m/s by 30°Cam
Electrical durability	IEC 60947-5-1 appendic C 3600 operating cycles/hour	5 million operating cycles DC-13, 24V->10W
Mechanical durability		30 million operating cycles
Minimum tripping torque		0,25 N.m

Connections

1 C/O snap action contact
Important note: 4A/24V Max

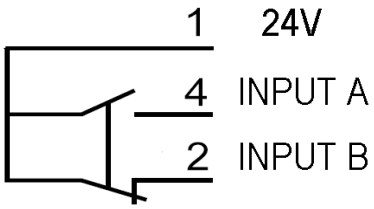

M12 male connector
Pin-out

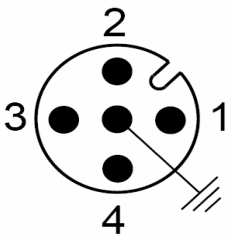

Contact diagram

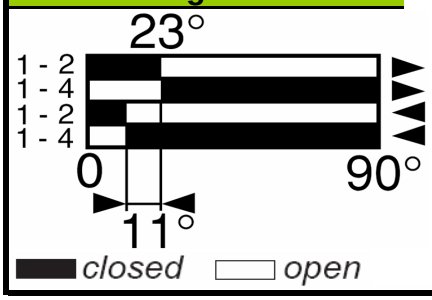
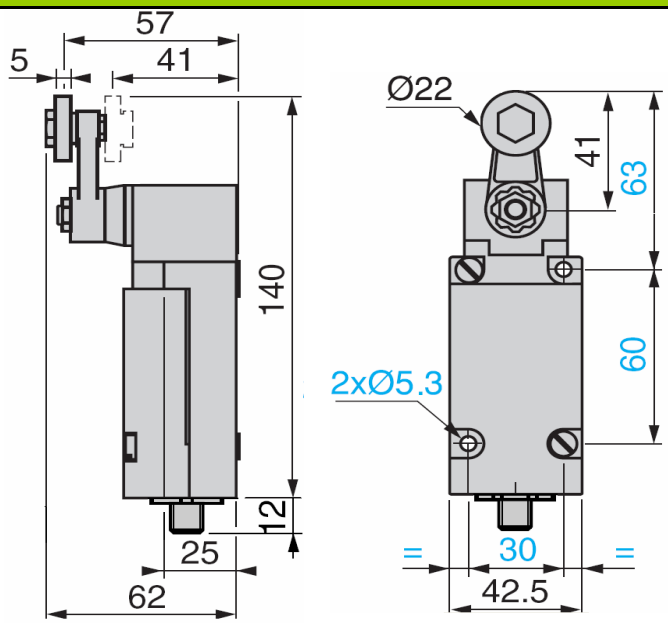
Dimensions