Altivar 61

METASYS N2

User's manual

VW3 A3 318

06/2010

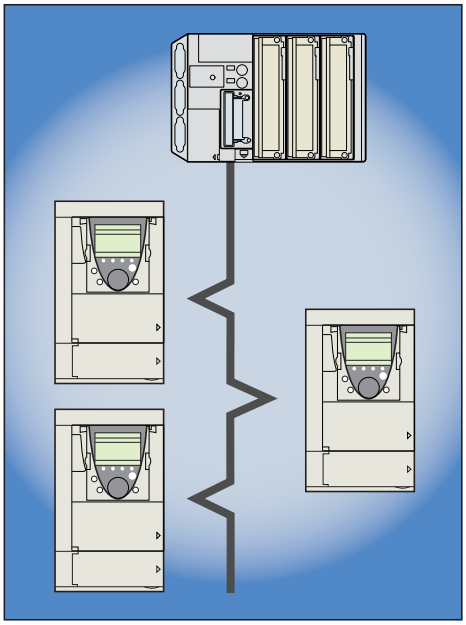

AAV33578

www.schneider-electric.com

Contents

1. Important Information 3
2. Before you begin 4
3. Introduction 5
4. Documentation structure 6
5. Notation 7
6. Quick start 8
7. Hardware setup 9
   7. 1. Receipt 9
   7. 2. Hardware description 9
   7. 3. Installing the card in the drive 9
   7. 4. Switch coding 10
8. Connecting to the bus 12
   8. 1. Cable routing practices 12
   8. 2. Card connector pinout 12
   8. 3. RS485 schematic for the card 13
   8. 4. Dsub 9-pin connector 14
9. Configuration 15
   9. 1. Communication parameters 15
   9. 2. Control 16
   9. 3. Communication scanner 23
   9. 4. Communication faults 24
   9. 5. Monitored parameters 25
10. Diagnostics 26
   10. 1. Checking the address 26
   10. 2. Checking the communication 26
   10. 3. LEDs 26
   10. 4. Control - Command 27
   10. 5. Communication scanner 28
   10. 6. Communication fault 29
   10. 7. Card fault 29
11. Network objects 30
   11. 1. List of type supported by ATV61 30
12. Network objects 34
   12. 1. Additional functions 34

NOTE

While every precaution has been taken in the preparation of this document, Schneider Electric SA assumes no liability for any omissions or errors it may contain, nor for any damages resulting from the application or use of the information herein.

The products described in this document may be changed or modified at any time, either from a technical point of view or in the way they are operated. Their description can in no way be considered contractual.

1. Important Information

NOTICE

Read these instructions carefully, and look at the equipment to become familiar with the device before trying to install, operate, or maintain it. The following special messages may appear throughout this documentation or on the equipment to warn of potential hazards or to call attention to information that clarifies or simplifies a procedure.

The addition of this symbol to a Danger or Warning safety label indicates that an electrical hazard exists, which will result in personnal if the instruction are not followed.

This is the safety alert symbol. It is used to alert you to potential personal injury hazards. Obey all safety messages that follow this symbol to avoid possible injury or death.

⚠ DANGER

DANGER indicates an imminently hazardous situation, which, if not avoided, **will result** in death, serious injury, or equipment damage.

⚠ WARNING

Warninig indicates a potentially hazardous situation, which, if not avoided, **can result** in death, serious injury, or equipment damage.

⚠ CAUTION

CAUTION indicates a potentially hazardous situation, which, if not avoided, **can result** in injury or equipment damage.

PLEASE NOTE

Electrical equipment should be serviced only by qualified personnel. No responsibility is assumed by Schneider Electric for any consequences arising out of the use of this material. This document is not intended as an instruction manual for untrained persons.
© 2006 Schneider Electric. All Rights Reserved.

2. Before you begin

Read and understand these instructions before performing any procedure with this drive.

⚠ DANGER

HAZARDOUS VOLTAGE

- Read and understand the Installation Manual before installing or operating the Altivar 61 drive. Installation, adjustment, repair, and maintenance must be performed by qualified personnel.
- The user is responsible for compliance with all international and national electrical standards in force concerning protective grounding of all equipment.
- Many parts of this variable speed drive, including the printed circuit cards, operate at the line voltage. DO NOT TOUCH. Use only electrically insulated tools.
- DO NOT touch unshielded components or terminal strip screw connections with voltage present.
- DO NOT short across terminals PA and PC or across the DC bus capacitors.
- Install and close all the covers before applying power or starting and stopping the drive.
- Before servicing the variable speed drive
  - Disconnect all power.
  - Place a “DO NOT TURN ON” label on the variable speed drive disconnect.
  - Lock the disconnect in the open position.
- Disconnect all power including external control power that may be present before servicing the drive. WAIT 15 MINUTES to allow the DC bus capacitors to discharge. Then follow the DC bus voltage measurement procedure given in the Installation Manual to verify that the DC voltage is less than 45 VDC. The drive LEDs are not accurate indicators of the absence of DC bus voltage.

Electric shock will result in death or serious injury.

⚠ CAUTION

DAMAGED EQUIPMENT

Do not install or operate any drive that appears damaged.
Failure to follow this instruction can result in equipment damage.

3. Introduction

Thank you for purchasing the Metasys N2 option card (VW3 A3 318) for Altivar 61 drive.

By Installing this board into the Altivar 61, data communication can be made with a host computer or other device via Metasys N2 network.

The communication card has a the communication card has a 4-pole open style connector for connection to the network: A, B, GND, SCR.

Data exchanges give access to all Altivar 61 functions:
- Control (start, stop, reset, setpoint),
- Monitoring (status, current, voltage, thermal state...),
- Diagnostics (alarms).

The graphic display terminal or the integrated display terminal can be used to access numerous functions for communication configuration and diagnostics.

4. Documentation structure

■ Metasys N2 manual

The present Metasys N2 user manual describes:
- connection to Metasys N2,
- configuration of the communication-specific parameters via the integrated HMI or the graphic HMI,
- diagnostics,
- networks variables.

You will also find important information in other Altivar 61 technical documents. They are available on the Web site www.schneider-electric.com and on the CDROM delivered with each drive.

■ Installation manual

The installation manual describes:
- how to assemble the drive (particularly how to mount the Metasys N2 card),
- how to connect the drive.

■ Programming manual

The programming manual describes:
- the functions and parameters of the drive,
- how to use the drive HMI (integrated HMI and graphic HMI).

■ Communication parameters manual

The Communication parameters manual describes:
- the operating modes specific to communication (CiA 402 state chart),
- the interaction between communication and local control (HMI and terminals),
- the drive parameters with specific information for use via a communication network (addresses, formats, etc).

When using the Metasys N2 card, some sections of the Communication parameters manual are not relevant :
  - profiles,
  - I/O profile
  - CiA 402 profile.

The description of drive parameters is useful only if you use the parameters access function of the Metasys N2 card (MBOXPARAM MBOXVALUEREAD, MBOXVALUEWRITE) or the communication scanner function (COMSCANOUT1, COMSCANIN1).

5. Notation

■ Drive terminal displays

The graphic display terminal menus are shown in square brackets.
Example: [1.9 COMMUNICATION].

The integrated 7-segment display terminal menus are shown in round brackets with a "-" at the end.
Example: (COM-).

Parameter names displayed on the graphic display terminal are written in square brackets.
Example: [Fallback speed]

Parameter codes displayed on the integrated 7-segment display terminal are written in round brackets.
Example: (LFF).

■ Formats

Hexadecimal values are written as follows: 16# or 0x
Binary values are written as follows: 2#

■ Abbreviations

O = Optional
M = Mandatory

6. Quick start

Operation		Refer to
A	**How to realize a factory setting of the drive** **In the menu:** [1 DRIVE MENU] [1.12 FACTORY SETTINGS] • Select [Config. Source]: Macro-conf, • Select [PARAMETER GROUP LIST]: All	Programming manual [1.12 FACTORY SETTINGS] (FCS-)
B	**How to configure main Metasys N2 communication parameters:** In the menu: [1 DRIVE MENU] [1.9 COMMUNICATION] [MET N2] • Check [Address] (Metasys N2 MAC address)	9. 1. Communication parameters page 15
C	**How to configure control is from Metasys N2** In the menu: [1 DRIVE MENU] [1.6 COMMAND] • Change [Ref.1 channel] from "AI1" to "Com. card"	9. 2. Control page 16
D	**Handle the drive by the Metasys N2 controller** • Control start / stop by the binary value RUNSTOPCMD, • Control the velocity setpoint by the analog value INPUTREF, • Control direction of rotation by the binary value FWDREVCMD, • Monitor if the drive is controlled local or remote (Metasys N2) by the binary value HANDAUTO ACT, • Monitor the running / stopped state by the binary value RUNSTOP, • Monitor the actual direction of rotation by the binary value FWDREV, • Monitor the actual speed or frequency by the analog value OUTPUTSPEED or OUTPUTFREQ. **Fault handling:** • Monitor the fault state by the binary value FAULT, • Monitor the fault detail by the analog value LASTFLT, • Remote reset the fault by the binary value FAULTRESET.	
E	**Switch local / remote by the drive HMI** Press F4 key (marked TK) to switch alternately from between Metasys N2 and HMI. The right of the upper display line: - REM: control by Metasys N2, - LOC: control by HMI.	Programming manual Graphic display terminal Description of the graphic screen
F	**Diagnose Metasys N2 communication by the drive HMI** In the menu: [1 DRIVE MENU] [1.2 - MONITORING] [COMMUNICATION MAP] [DIAG NETWORK] • Monitor the frame and error frame counters.	10. 2. Checking the communication page 26
G	**Diagnose Metasys N2 communication by the drive HMI** In the menu: [1 DRIVE MENU] [1.2 - MONITORING] [COMMUNICATION MAP] • Check that the Command Channel is Com. card, • Check that Active ref. channel is Com. card.	10. 2. Checking the communication page 26
H	**Disable network fault for testing** In the menu: [1 DRIVE MENU] [1.8 FAULT MANAGEMENT] (FLt-) Configure [COM. FAULT MANAGEMENT] to [Ignore].	Programming manual [1.8 FAULT MANAGEMENT] (FLt-)

7. Hardware setup

7. 1. Receipt

- Check that the card reference printed on the label is the same as that on the delivery note corresponding to the purchase order.
- Remove the option card from its packaging and check that it has not been damaged in transit.

7. 2. Hardware description

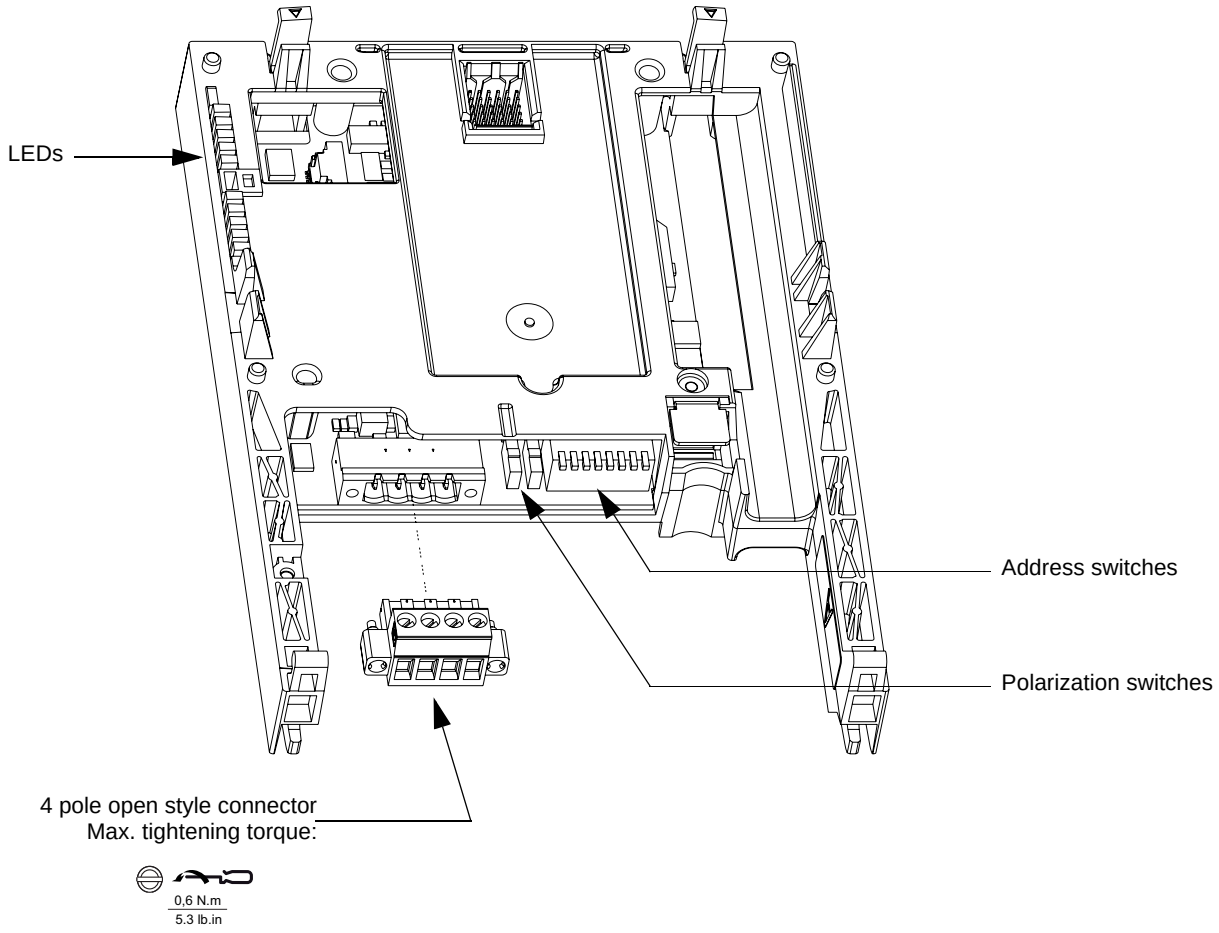

7. 3. Installing the card in the drive

Refer to the Installation manual.

7. 4. Switch coding

■ Choosing polarization

Set both switches to the lower position.

Polarization to the RS 485 line at 4.7 kΩ.

■ Coding the address

The switches are used to encode the address (1 to 254) of the drive on the bus.
- If address 0 is defined by the switches, the card will use address 1.
- The usage of the address 255 is not advised.

The switch settings can only be changed when the drive is turned off.

The correspondence between the value and the position of the switch is as follows:
- 0 = OFF = Switch in upper position,
- 1 = ON = Switch in lower position.

The address is binary-coded.

Examples :

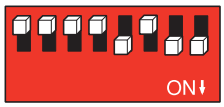

Address 11 = 2#000 1011

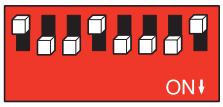

Address 110 = 2#110 1110

7. Hardware setup

The table below indicates the positions of the switches for all configurable addresses:

Address	Switches 1234 5678	Address	Switches 1234 5678	Address	Switches 1234 5678	Address	Switches 1234 5678	Address	Switches 1234 5678
0	0000 0000	52	0011 0100	104	0110 1000	156	1001 1100	208	1101 0000
1	0000 0001	53	0011 0101	105	0110 1001	157	1001 1101	209	1101 0001
2	0000 0010	54	0011 0110	106	0110 1010	158	1001 1110	210	1101 0010
3	0000 0011	55	0011 0111	107	0110 1011	159	1001 1111	211	1101 0011
4	0000 0100	56	0011 1000	108	0110 1100	160	1010 0000	212	1101 0100
5	0000 0101	57	0011 1001	109	0110 1101	161	1010 0001	213	1101 0101
6	0000 0110	58	0011 1010	110	0110 1110	162	1010 0010	214	1101 0110
7	0000 0111	59	0011 1011	111	0110 1111	163	1010 0011	215	1101 0111
8	0000 1000	60	0011 1100	112	0111 0000	164	1010 0100	216	1101 1000
9	0000 1001	61	0011 1101	113	0111 0001	165	1010 0101	217	1101 1001
10	0000 1010	62	0011 1110	114	0111 0010	166	1010 0110	218	1101 1010
11	0000 1011	63	0011 1111	115	0111 0011	167	1010 0111	219	1101 1011
12	0000 1100	64	0100 0000	116	0111 0100	168	1010 1000	220	1101 1100
13	0000 1101	65	0100 0001	117	0111 0101	169	1010 1001	221	1101 1101
14	0000 1110	66	0100 0010	118	0111 0110	170	1010 1010	222	1101 1110
15	0000 1111	67	0100 0011	119	0111 0111	171	1010 1011	223	1101 1111
16	0001 0000	68	0100 0100	120	0111 1000	172	1010 1100	224	1110 0000
17	0001 0001	69	0100 0101	121	0111 1001	173	1010 1101	225	1110 0001
18	0001 0010	70	0100 0110	122	0111 1010	174	1010 1110	226	1110 0010
19	0001 0011	71	0100 0111	123	0111 1011	175	1010 1111	227	1110 0011
20	0001 0100	72	0100 1000	124	0111 1100	176	1011 0000	228	1110 0100
21	0001 0101	73	0100 1001	125	0111 1101	177	1011 0001	229	1110 0101
22	0001 0110	74	0100 1010	126	0111 1110	178	1011 0010	230	1110 0110
23	0001 0111	75	0100 1011	127	0111 1111	179	1011 0011	231	1110 0111
24	0001 1000	76	0100 1100	128	1000 0000	180	1011 0100	232	1110 1000
25	0001 1001	77	0100 1101	129	1000 0001	181	1011 0101	233	1110 1001
26	0001 1010	78	0100 1110	130	1000 0010	182	1011 0110	234	1110 1010
27	0001 1011	79	0100 1111	131	1000 0011	183	1011 0111	235	1110 1011
28	0001 1100	80	0101 0000	132	1000 0100	184	1011 1000	236	1110 1100
29	0001 1101	81	0101 0001	133	1000 0101	185	1011 1001	237	1110 1101
30	0001 1110	82	0101 0010	134	1000 0110	186	1011 1010	238	1110 1110
31	0001 1111	83	0101 0011	135	1000 0111	187	1011 1011	239	1110 1111
32	0010 0000	84	0101 0100	136	1000 1000	188	1011 1100	240	1111 0000
33	0010 0001	85	0101 0101	137	1000 1001	189	1011 1101	241	1111 0001
34	0010 0010	86	0101 0110	138	1000 1010	190	1011 1110	242	1111 0010
35	0010 0011	87	0101 0111	139	1000 1011	191	1011 1111	243	1111 0011
36	0010 0100	88	0101 1000	140	1000 1100	192	1100 0000	244	1111 0100
37	0010 0101	89	0101 1001	141	1000 1101	193	1100 0001	245	1111 0101
38	0010 0110	90	0101 1010	142	1000 1110	194	1100 0010	246	1111 0110
39	0010 0111	91	0101 1011	143	1000 1111	195	1100 0011	247	1111 0111
40	0010 1000	92	0101 1100	144	1001 0000	196	1100 0100	248	1111 1000
41	0010 1001	93	0101 1101	145	1001 0001	197	1100 0101	249	1111 1001
42	0010 1010	94	0101 1110	146	1001 0010	198	1100 0110	250	1111 1010
43	0010 1011	95	0101 1111	147	1001 0011	199	1100 0111	251	1111 1011
44	0010 1100	96	0110 0000	148	1001 0100	200	1100 1000	252	1111 1100
45	0010 1101	97	0110 0001	149	1001 0101	201	1100 1001	253	1111 1101
46	0010 1110	98	0110 0010	150	1001 0110	202	1100 1010	254	1111 1110
47	0010 1111	99	0110 0011	151	1001 0111	203	1100 1011		
48	0011 0000	100	0110 0100	152	1001 1000	204	1100 1100		
49	0011 0001	101	0110 0101	153	1001 1001	205	1100 1101		
50	0011 0010	102	0110 0110	154	1001 1010	206	1100 1110		
51	0011 0011	103	0110 0111	155	1001 1011	207	1100 1111		

Address 0 is not allowed and will be considered as address 1.

8. Connecting to the bus

8. 1. Cable routing practices

When wiring Altivar 61 drives to a Metasys N2 network, follow all wiring practices required by national and local electrical codes. Also observe the following guidelines:
- Avoid areas of high temperature, moisture, vibration, or other mechanical stress.
- Secure the cable where necessary to prevent its weight and the weight of other cables from pulling or twisting the cable.
- Use cable ducts, raceways, or other structures to protect the cable. Use these structures for signal wiring paths. They must not contain power wiring.
- Avoid sources of electrical interference that can induce noise into the cable. Use the maximum practicable separation from such sources.

When planning cable routing within a building, follow these guidelines:
- Maintain a minimum separation of 1 m from the following equipment:
  - air conditioners and large blowers,
  - elevators and escalators,
  - radios and televisions,
  - intercom and security systems,
  - fluorescent, incandescent, and neon lighting fixtures.

- Maintain a minimum separation of 3 m from the following equipment:
  - line and motor power wiring,
  - transformers,
  - generators,
  - alternators.

When wiring in electrical equipment rooms or large electrical equipment line-ups, observe the following guidelines for cable segregation and separation of circuits:
- Use metallic conduit for drive wiring. Do not run control network and power wiring in the same conduit.
- Separate non-metallic conduits or cable trays used to carry power wiring from metallic conduit carrying low-level control network wiring by at least 300 mm.
- Separate metallic conduits carrying power wiring or low-level control network wiring by at least 80 mm.
- Cross the metallic conduits and non-metallic conduits at right angles whenever power and control network wiring cross.
- Attenuate conducted emissions from the drive to the line in some installations to prevent interference with telecommunication, radio, and sensitive electronic equipment. Such instances may require attenuating filters. Consult the Altivar catalog for selection and application of these filters.

Maximum length of bus	1000 m at 19,200 bps (9600 bps max. with Metasys N2)
Maximum number of stations	32 stations, i.e, 31 slaves (without repeater)

8. 2. Card connector pinout

Contact no.	Signal
B	+
A	-
GND	GND
SCR	Shield

- The cable sheath should be stripped off by about 10 mm (0.4 in).
- For wiring the terminals, use a slotted screwdriver with a 0.6 mm (0.02 in) thick and 3.5 mm (0.14 in) width blade.
- Tightening torque for the terminal block is 0.5 to 0.6 N-m (0.37-0.44 ft-lb)

Various notation exist for RS485 signals, the table below may be helpful.

Metasys N2	EIA/TIA-485	Modbus	Jbus	Uni-Telway
+	B/B’	D1	RD+/TD+ or L+	D(B)
-	A/A’	D0	RD-/TD- or L-	D(A)
Ground	C/C’	Common		0 VL

8. 3. RS485 schematic for the card

The RS485 interface on the Metasys N2 card is electrically isolated from the drive.

Schematic diagram:

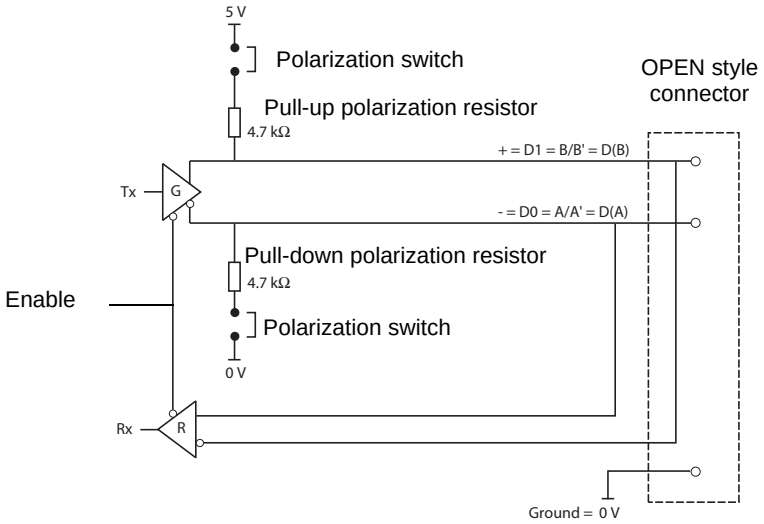

The polarization switches are used to connect or disconnect the pull-up and pull-down resistors.

■ Recommandations for wiring the option card to the Metasys N2 network

Connections	2 wires differential
Maximum devices per segment	32
Maximal cable length	1200m

Install a line terminator at both ends of the line.

8. 4. Dsub 9-pin connector

If you have the older option card VW3 A3 313:

The communication card has a Dsub 9-pin connector for connection to the network.

Contact no.	Signal
1	Reserved (do not connect)
2	RXD0 = RD(A)
3	-
4	Ground
5	RxD1 = RD(B)
6	RxD1 = RD(B)
7	+
8	Reserved (do not connect)
9	Supply (5 V)

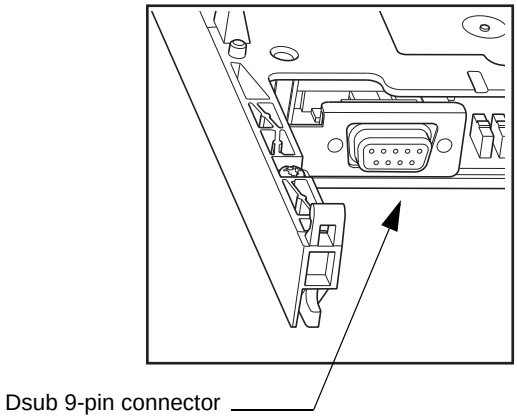

You can also use an additional Dsub 9-pin to open style adapter to connect the network cable to the card

ì

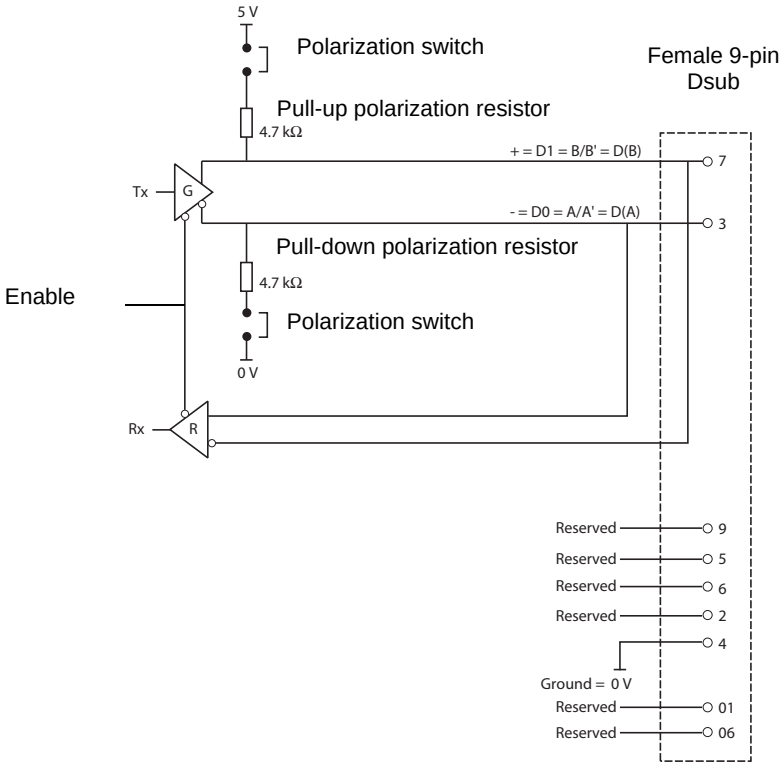

9. 1. Communication parameters

Configure the following parameters in the [1.9 - COMMUNICATION] (COM-) menu, [MET N2] (MEt-) submenu.
These parameters can only be modified when the motor is stopped.
Modifications will be taken into account by the drive after power cycled.

Parameter	Possible values	Terminal display	Default value
[Address] (AdrC)	1 to 254	[1] (1) to [254] (254)	Value taken from the address switches
[Bit rate](Bdr)	9600 bit/s	[9600 Bd] (96)	[9600 Bd] (96)
[Format] (FOr)		[8-N-1] (8n1)	[8-N-1] (8n1) Display parameter (read only)
[Time - out] (tLP)	Communication time-out in seconds. 0.1 to 60.0 s	[0.1s] (0.1) to [60.0s] (60.0)	[10.0s] (10.0)
[Valid frame counter] (tFC)	Displays the total number of frames received by the communication card since the last power ON.	-	-
[Error frame counter] (EFC)	Displays the total number of bad frames received by the communication card since the last power ON.	-	-

9. 2. Control

Numerous configurations are possible. For more information, refer to the Programming Manual and the Parameters Manual.
The following configurations are just some of the possibilities available.

■ Allowed configurations

If the drive is only monitored by Metasys N2:
There is no configuration constraint.

If the drive is controlled by Metasys N2:
The parameter [Profile] (CHCF) must be configured to [Not separ.] (SIM) or [Separate] (SEP). [Not separ.] (SIM) is the default value.
It is not allowed to configure the parameter [Profile] (CHCF) to the value [8 serie] (SE8) or [I/O profile] (IO).
If a forbidden configuration is done, the drive will trip on [External fault com.] (EPF2).
However, if the I/O profile is configured and that no Command channel are assigned to the communication card, the drive will not trip.

■ Control via Metasys N2

The command and the setpoint come from Metasys N2.

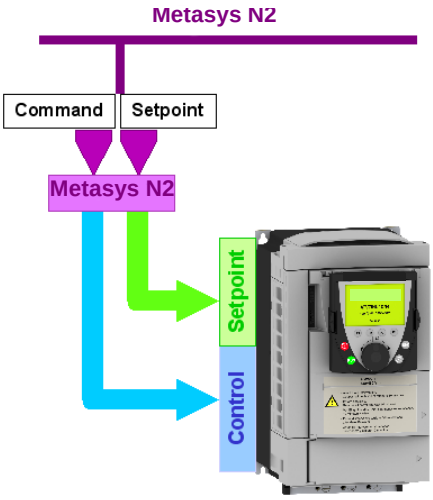

Configure the following parameters:

Parameter	Value	Comment
Profile	Non separate CiA402 profile	The run command are in CiA402 profile the command and the setpoint come from the same channel.
Setpoint 1 and command configuration	Network card	The setpoint and command come from Metasys N2.

Configuration via the graphic display terminal or the integrated display terminal:

Menu	Parameter	Value
[1.6 - COMMAND] (CtL-)	[Profile] (CHCF)	[Not separ.] (SIM): default value
	[Ref.1 chan] (Fr1)	[Com. card] (nEt)

■ Control via Metasys N2 or via the terminals

The command and the setpoint both come from Metasys N2 or the terminals.
Depending on the configuration, the application function are activated or not.

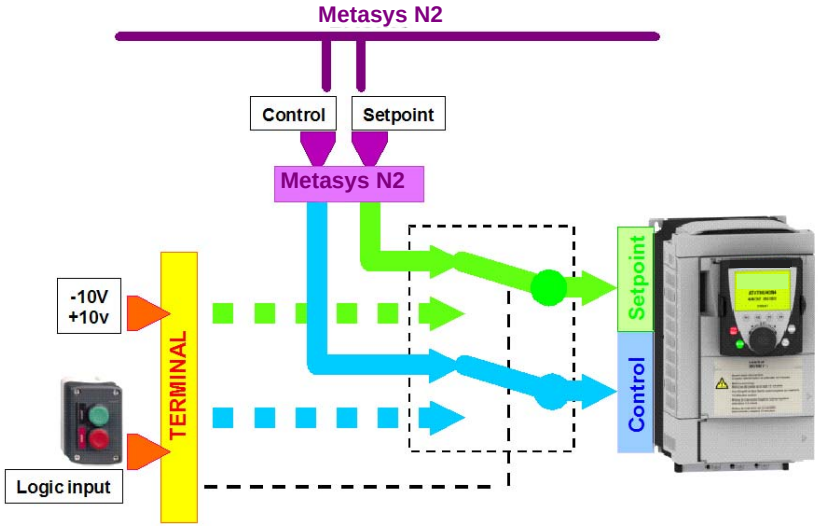

2 different use cases are described below. The setpoint is switched from Metasys N2 to the terminals. In the first case, the application function applies and not in the second one.

Note:
With such operating mode, we advertize that the master controller must monitor the drive state (by polling significant points), thus when the control and/or the setpoint are switched back to Metasys N2, the controller will react properly (when the Drive is switched to local mode, all overridden commands are released).

Switching of control and setpoint from Metasys N2 to the terminals with application function

Input LI5 is used to switch the control and the setpoint between Metasys N2 and the terminals. When switched to the terminals, the application functions (summing…) remain active.

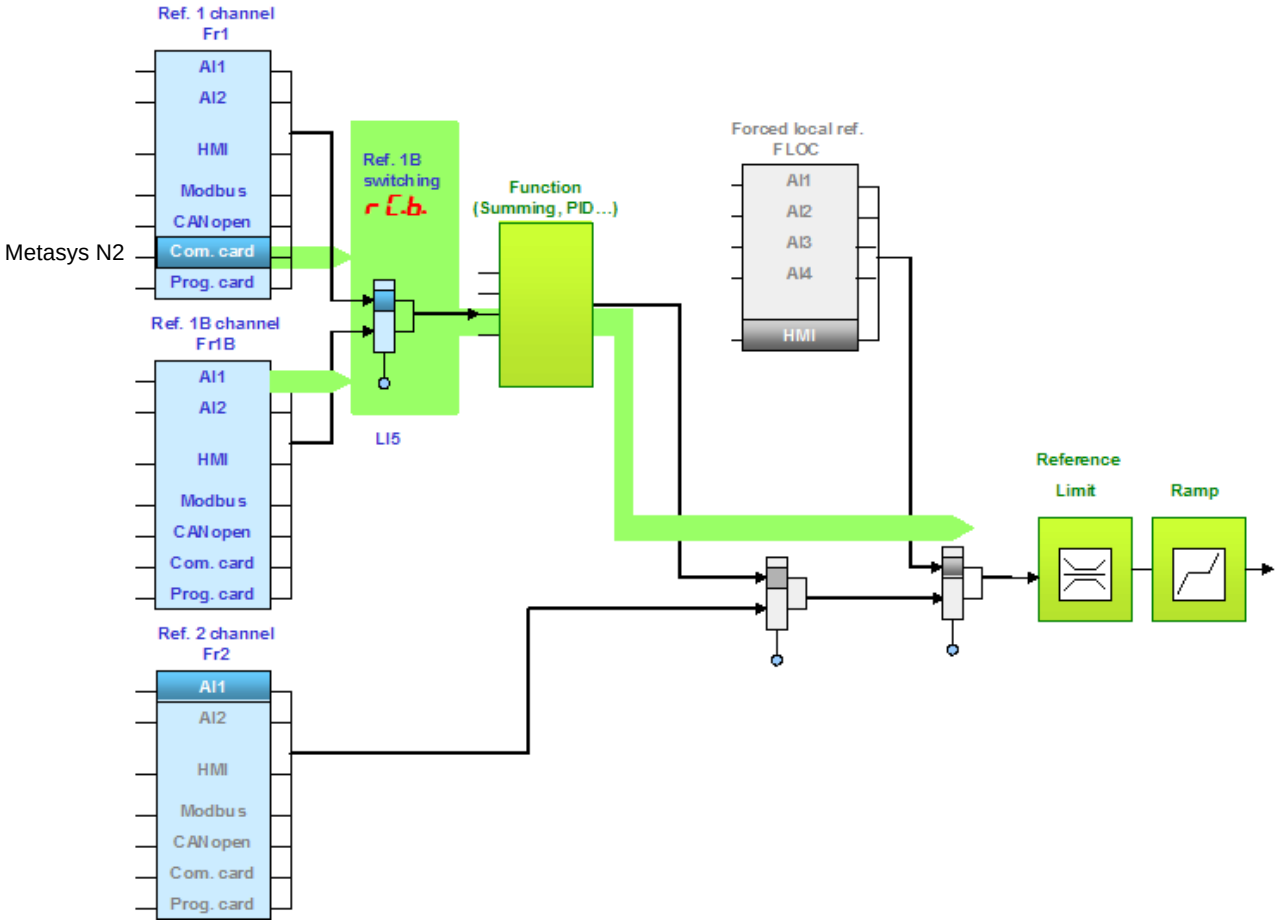

Configure the following parameters:

Parameter	Value	Comment
Profile	Separate profile	The command and the setpoint can come from different channels.
Setpoint 1 configuration	Network card	Setpoint 1 comes from Metasys N2.
Setpoint 1B configuration	Analog input 1 on the terminals	Setpoint 1B comes from input AI1 on the terminals.
Setpoint switching	Input LI5	Input LI5 switches the setpoint (1 ↔ 1B).
Command 1 configuration	Network card	Command 1 comes from Metasys N2.
Command 2 configuration	Terminals	Command 2 comes from the terminals.
Command switching	Input LI5	Input LI5 switches the command

Setpoint 1B is directly connected to the functions of the drive. If switching to the terminals is performed, the functions that affect the reference (summing, PID, etc) are active.

Configuration via the graphic display terminal or the integrated display terminal:

Menu	Parameter	Value
[1.6 - COMMAND] (CtL-)	[Profile] (CHCF)	[Separate] (SEP)
	[Ref.1 channel] (Fr1)	[Com. card] (nEt)
	[Cmd channel 1] (Cd1)	[Com. card] (nEt)
	[Cmd channel 2] (Cd2)	[Terminals] (tEr)
	[Cmd switching] (CCS)	[LI5] (LI5)
[1.7 - APPLICATION FUNCT.] (FUn-) [REFERENCE SWITCH]	[Ref.1B channel] (Fr1b)	[Ref. AI1] (AI1)
	[Ref.1B switching] (rCb)	[LI5] (LI5)

Switching of control and setpoint from Metasys N2 to the terminals without application function

Input LI5 is used to switch the control and the setpoint between Metasys N2 and the terminals. When switched to the terminals, the application functions (summing…) are not active.

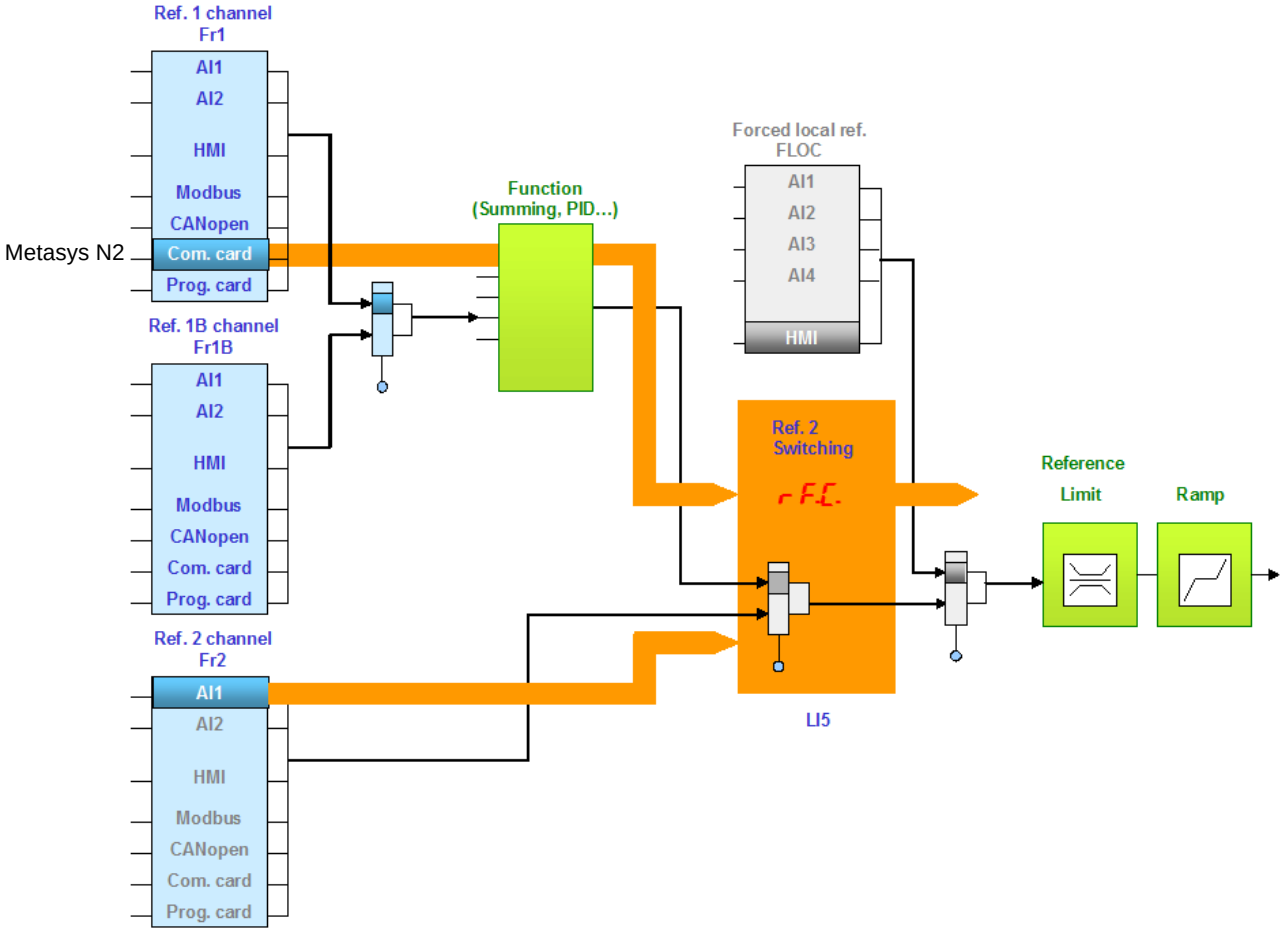

Configure the following parameters:

Parameter	Value	Comment
Profile	Non separate profile	The command and the setpoint come from the same channel.
Setpoint 1 configuration	Network card	Setpoint 1 and command 1 comes from Metasys N2.
Setpoint 2 configuration	Analog input 1 on the terminals	Setpoint 2 and command 2 comes from input AI1 on the terminals.
Setpoint switching	Input LI5	Input LI5 switches the setpoint (1 ↔ 2) and the command.

Configuration via the graphic display terminal or the integrated display terminal:

Menu	Parameter	Value
[1.6 - COMMAND] (CtL-)	[Profile] (CHCF)	[Not separ.] (SIM):default value
	[Ref.1 chan] (Fr1)	[Com. card] (nEt)
	[Ref.2 chan] (Fr2)	[AI1 ref.] (AI1)
	[Ref.2 switching] (rFC)	[LI5] (LI5)

■ Control via Metasys N2 and setpoint switching

The command comes from Metasys N2.
The setpoint comes either from Metasys N2 or from the terminals.
Depending on the configuration, the application function are activated or not.

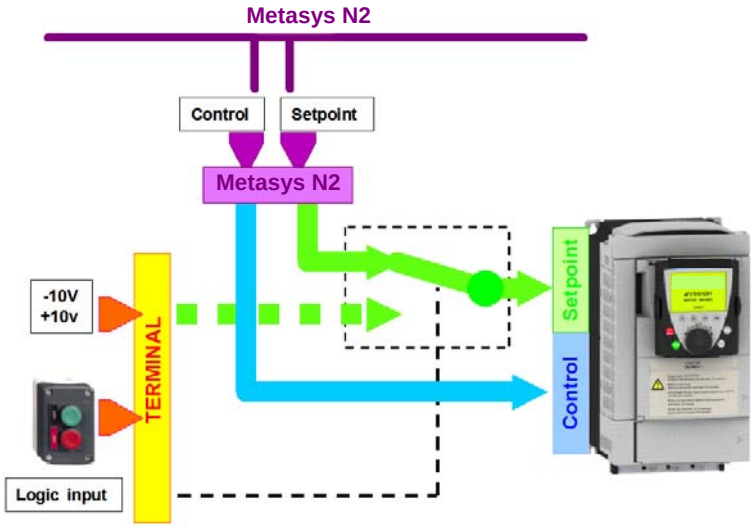

The command comes from Metasys N2. The setpoint comes either from Metasys N2 or from the terminals. Depending on the configuration, the application functions are active or not.

Note:
With such operating mode, we advertize that the master controller must monitor the drive state (by polling significant points), thus when the control and/or the setpoint are switched back to Metasys N2, the controller will react properly (when the Drive is switched to local mode, all overridden commands are released).

Control via Metasys N2 and switching of the setpoint at the terminals with application function

The command comes from Metasys N2. Input LI5 is used to switch the setpoint between Metasys N2 and the terminals. When switched to the terminals, the application functions (summing…) remain active.

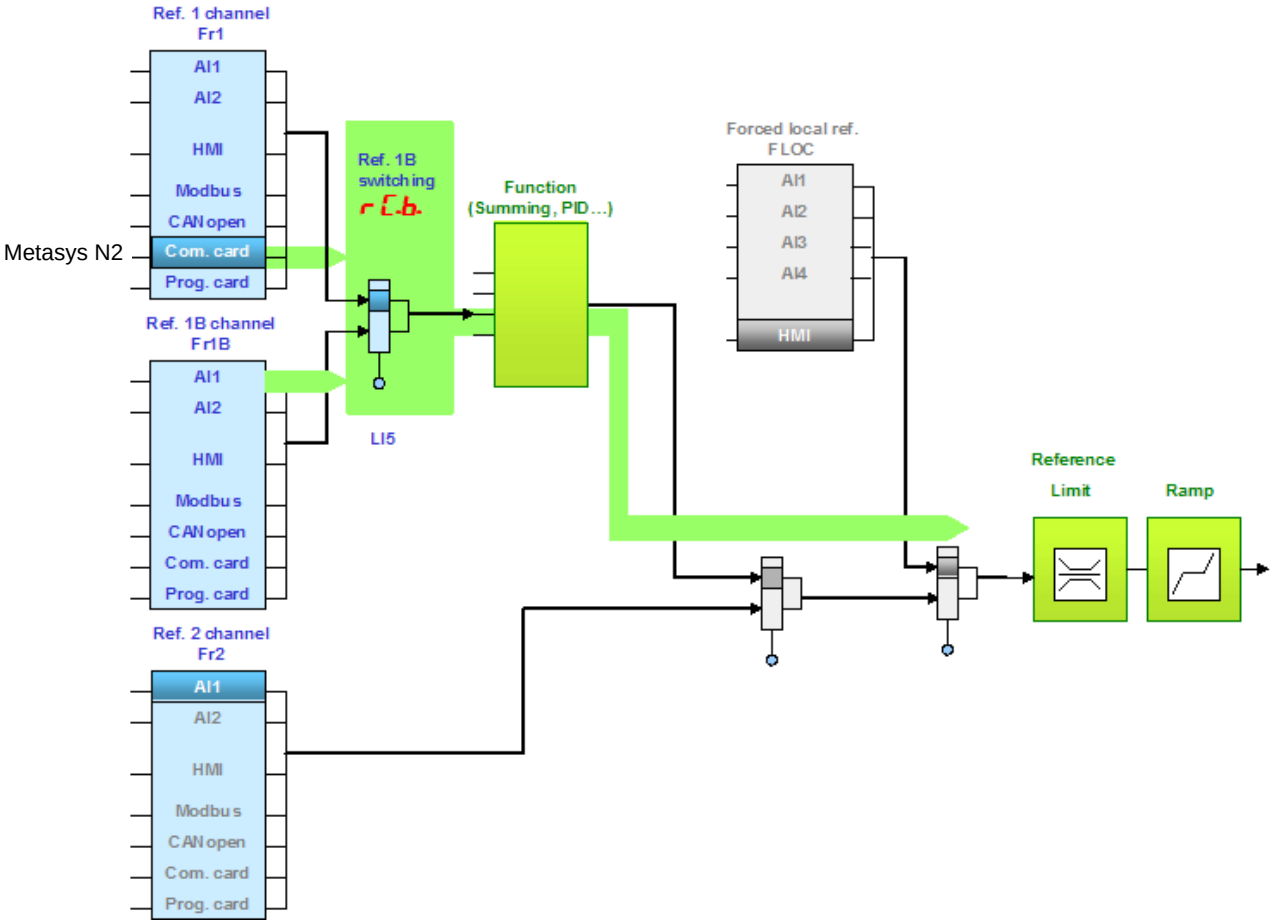

Configure the following parameters:

Parameter	Value	Comment
Profile	Separate profile	The command and the setpoint can come from different channels.
Setpoint 1 configuration	Network card	Setpoint 1 comes from Metasys N2.
Setpoint 1B configuration	Analog input 1 on the terminals	Setpoint 1B comes from input AI1 on the terminals.
Setpoint switching	Input LI5	Input LI5 switches the reference (1 ↔ 1B).
Command 1 configuration	Network card	Command 1 comes from Metasys N2.
Command switching	Channel 1	Channel 1 is the command channel.

Reference 1B is directly connected to the functions of the drive. If switching to the terminals is performed, the functions that affect the reference (summing, PID, etc) are active.

Configuration via the graphic display terminal or the integrated display terminal:

Menu	Parameter	Value
[1.6 - COMMAND] (CtL-)	[Profile] (CHCF)	[Separate] (SEP)
	[Ref.1 channel] (Fr1)	[Com. card] (nEt)
	[Cmd channel 1] (Cd1)	[Com. card] (nEt)
	[Cmd switching] (CCS)	[ch1 active] (Cd1)
[1.7 - APPLICATION FUNCT.] (FUn-) [REFERENCE SWITCH]	[Ref.1B channel] (Fr1b)	[Ref. AI1] (AI1)
	[Ref.1B switching] (rCb)	[LI5] (LI5)

Control via Metasys N2 and switching of the setpoint at the terminals with application function

The command comes from Metasys N2. Input LI5 is used to switch the setpoint between Metasys N2 and the terminals. When switched to the terminals, the application functions (summing…) are not active.

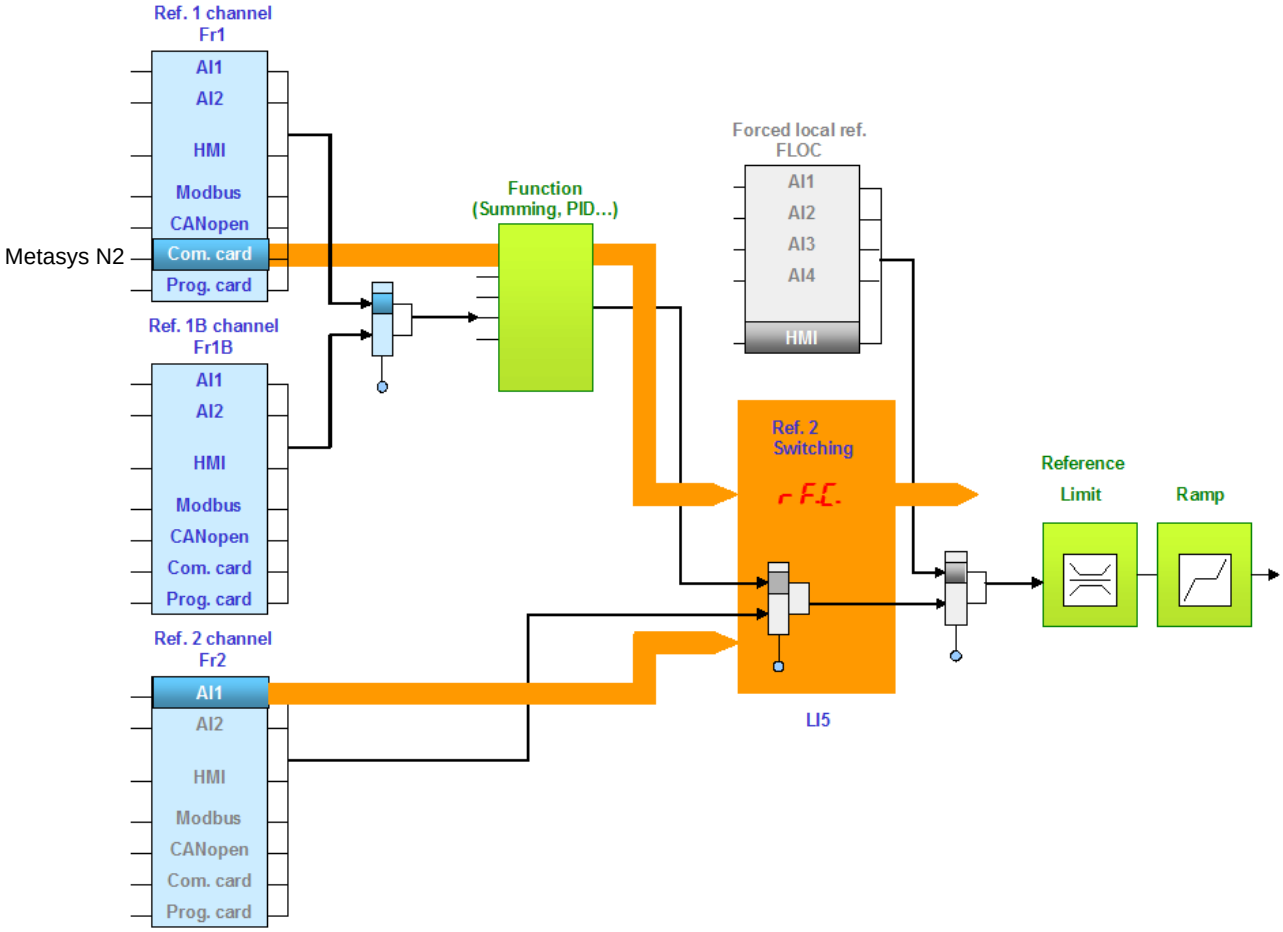

Configure the following parameters:

Parameter	Value	Comment
Profile	Separate profile	The command and the setpoint can come from different channels.
Setpoint 1 configuration	Network card	Setpoint 1 comes from Metasys N2.
Setpoint 2 configuration	Analog input 1 on the terminals	Setpoint 2 comes from input AI1 on the terminals.
Setpoint switching	Input LI5	Input LI5 switches the setpoint (1↔ 2).
Command 1 configuration	Network card	Command 1 comes from Metasys N2.
Command switching	Channel 1	Channel 1 is the command channel.

Setpoint 1B is connected to the functions (Summing, etc) that remain active even after switching.

Configuration via the graphic display terminal or the integrated display terminal:

Menu	Parameter	Value
[1.6 – COMMAND] (CtL-)	[Profile] (CHCF)	[Separate] (SEP)
	[Ref.1 chan] (Fr1)	[Com. card] (nEt)
	[Ref.2 chan] (Fr2)	[AI1 ref.] (AI1)
	[Ref 2 switching] (rFc)	[LI5] (LI5)
	[Cmd channel 1] (Cd1)	[Com. card] (nEt)
	[Cmd switching] (CCS)	[ch1 active] (Cd1)

9. 3. Communication scanner

The communication scanner enables all the application-relevant parameters to be grouped in a collection of Av's (Metasys N2 analog value points): COMSCANOUTØ to COMSCANOUT7 and COMSCANINØ to COMSCANIN7.

The communication scanner provides also a link with the "controller inside" card.

The 8 output variables are assigned using the 8 [Scan.Out● address] (nCA●) parameters. They are configured using the graphic display terminal via the [1.9 - COMMUNICATION] (COM-) menu, [COM. SCANNER OUTPUT] (OCS-) submenu.

The 8 input variables are assigned using the 8 [Scan. IN● address] (nMA●) parameters. They are configured using the graphic display terminal via the [1.9 - COMMUNICATION] (COM-) menu, [COM. SCANNER INPUT] (ICS-) submenu.

Enter the logic address of the parameter (see the Parameters Manual).

If a [Scan.Out● address] (nCA●) or [Scan. IN● address] (nMA●) parameter equals zero, the corresponding variable is not used by the drive.

These 16 assignment parameters are described in the tables below:

Configuration parameter name	Default assignment of the output variable
[Scan. Out1 address] (nCA1)	Control word (CMd) (1)
[Scan. Out2 address] (nCA2)	Speed reference (LFrd)
[Scan. Out3 address] (nCA3)	Not used
[Scan. Out4 address] (nCA4)	Not used
[Scan. Out5 address] (nCA5)	Not used
[Scan. Out6 address] (nCA6)	Not used
[Scan. Out7 address] (nCA7)	Not used
[Scan. Out8 address] (nCA8)	Not used

Configuration parameter name	Default assignment of the input variable
[Scan. IN1 address] (nMA1)	Status word (EtA)
[Scan. IN2 address] (nMA2)	Output speed (rFrd)
[Scan. IN3 address] (nMA3)	Not used
[Scan. IN4 address] (nMA4)	Not used
[Scan. IN5 address] (nMA5)	Not used
[Scan. IN6 address] (nMA6)	Not used
[Scan. IN7 address] (nMA7)	Not used
[Scan. IN8 address] (nMA8)	Not used

(1) CMD and LFrd are given here as example. In practice, when the drive is operated from Metasys N2, these two words are already controlled by the communication card.

Example of configuration via the graphic display terminal:

RDY	NET	+0.00Hz	0A
COM. SCANNER INPUT			☐
Scan. IN1 address	:		3201
Scan. IN2 address	:		8604
Scan. IN3 address	:		0
Scan. IN4 address	:		0
Scan. IN5 address	:		0
Code		Quick	☑
Scan. IN6 address	:		0
Scan. IN7 address	:		0
Scan. IN8 address	:		0

RDY	NET	+0.00Hz	0A
COM. SCANNER OUTPUT			☐
Scan. Out1 address	:		8501
Scan. Out2 address	:		8602
Scan. Out3 address	:		0
Scan. Out4 address	:		0
Scan. Out5 address	:		0
Code		Quick	☑
Scan. Out6 address	:		0
Scan. Out7 address	:		0
Scan. Out8 address	:		0

Note:
Any modification to parameters [Scan.Out● address] (nCA●) or [Scan. IN● address] (nMA●) must be made with the motor stopped. The master controller program should be updated to take account of this modification.

9. 4. Communication faults

A Metasys N2 fault is triggered if the Metasys N2 card does not receive any Metasys N2 messages (regardless of address) at its address within a predefined time period (time out defined by tLP). All Metasys N2 request types are taken into account (read, write, etc.).
The response of the drive in the event of a Metasys N2 communication fault can be configured.

Configuration can be performed using the graphic display terminal or integrated display terminal using the [Network fault mgt] (CLL) parameter in the [1.8 FAULT MANAGEMENT] (FLt-) menu, [COM. FAULT MANAGEMENT] (CLL-) submenu.

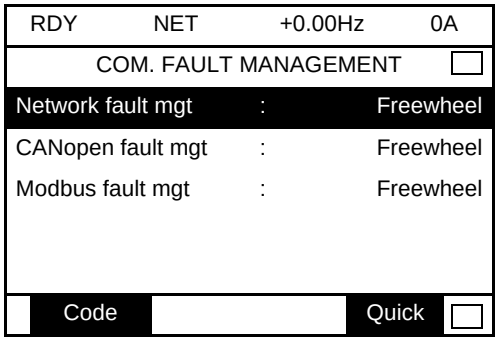

The values of the [Network fault mgt] (CLL) parameter, which trigger a [Com. network] (CnF) drive fault, are:

Value	Meaning
[Freewheel] (YES)	Freewheel stop (factory setting)
[Ramp stop] (rMP)	Stop on ramp
[Fast stop] (FSt)	Fast stop
[DC injection] (dC I)	DC injection stop

The values of the [Network fault mgt] (CLL) parameter, which do not trigger a drive fault, are:

Value	Meaning
[Ignore] (nO)	Fault ignored
[Per STT] (Stt)	Stop according to configuration of [Type of stop] (Stt).
[fallback spd] (LFF)	Switch to fallback speed, maintained as long as the fault is present and the run command is not disabled.
[Spd maint.] (rLS)	The drive maintains the speed at the time the fault occurred, as long as the fault persists and the run command has not been removed.

The fallback speed can be configured via the [Fallback speed] (LFF) parameter in the [1.8 – FAULT MANAGEMENT] (FLt-) menu.

9. 5. Monitored parameters

It is possible to select up to 4 parameters to display their values in the [1.2 - MONITORING] menu ([COMMUNICATION MAP] submenu) on the graphic display terminal.

The selection is made via the [6 – MONITOR CONFIG.] menu ([6.3 - CONFIG. COMM. MAP] submenu).

Each parameter [Address 1 select] ... [Address 4 select] can be used to choose the logic address of the parameter. Select an address of zero to disable the function.

In the example given here, the monitored words are:

- Parameter 1 = Motor current (LCr): logic address 3204; signed decimal format
- Parameter 2 = Motor torque (Otr): logic address 3205; signed decimal format
- Parameter 3 = Last fault occurred (LFt): logic address 7121; hexadecimal format
- Disabled parameter: address 0; default format: hexadecimal format

RDY	NET	+0.00Hz	0A
6.3 CONFIG. COMM. MAP.			☐
Address 1 select	:		3204
FORMAT 1	:		Signed
Address 2 select	:		3205
FORMAT 2	:		Signed
Address 3 select	:		7121
Code		Quick	☑
FORMAT 3	:		Hex
Address 4 select	:		0
FORMAT 4	:		Hex

One of the three display formats below can be assigned to each monitored word:

Format	Range	Terminal display
Hexadecimal	0000 ... FFFF	[Hex]
Signed decimal	-32,767 ... 32,767	[Signed]
Unsigned decimal	0 ... 65,535	[Unsigned]

10. Diagnostics

10. 1. Checking the address

On the graphic display terminal or integrated display terminal, check the address that has been coded on the switches using the [Address] (Adr C) parameter in the [1.9 COMMUNICATION] (COM-) menu, [MET N2] (MEt) submenu.
This parameter cannot be modified.

10. 2. Checking the communication

On the graphic display terminal, in the [1.2 - MONITORING] (SUP) menu [COMMUNICATION MAP] (CMM-) menu [DIAG NETWORK] (nEt):

Contents of the DIAG NETWORK sub menu with a Metasys N2 communication board:

Parameter	Comment
[Address] (Adr C)	Displays the device address (configured by DIP switches). The setting of these switches must (only) be done when the drive is powered off.
[Frame counter] (tFC)	Displays the total number of frames received by the communication card since the last power ON.
[Invalid Frame counter] EFC)	Displays the total number of bad frames received by the communication card since the last power ON.

10. 3. LEDs

The Metasys N2 card has 2 LEDs, RUN and ERR, which are visible through the drive cover.

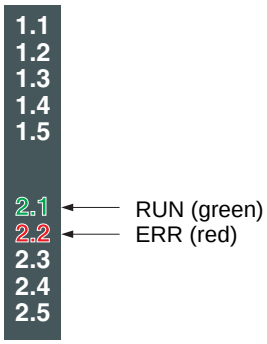

Green RUN LED	Red ERR LED	Meaning	Corrective action
OFF	OFF	Drive not operating or turned off	Check the power supply.
Intermittent flash	Intermittent flash	Green LED will flash whenever valid N2 message is received.	NA
		Red LED will flash whenever invalid N2 message is received.	• Check the environment (electromagnetic compatibility). • Check the communication parameter configuration (protocol, speed, format). • Do not forget that the communication parameter configuration is only taken into account by the drive following a power break. • Check that the slave address is unique.
ON	ON: 0.5s OFF: 0.5s	Invalid drive configuration: EPF2	Bad control configuration: See “Allowed configurations”, page 16. The drive is not an ATV61:The use of this opton card is not possible on an ATV71.
OFF	Flashing, 3 times in 2 seconds, off for 1 second	Network error state: ATV61 has not received valid message within time-out period programmed in Menu 1.9 - Communication.	• Check the environment (electromagnetic compatibility). • Check the wiring. • Check that the master is communicating within the time out period (= 10 s).
OFF	Flashing 5 times per second	Option board error state: internal communication error between N2 option card and drive controller main control board.	• Check the environment (electromagnetic compatibility). • Check the card/drive connection. • Check that only one communication card has been installed. • Check that no more than two option cards have been installed. • Replace the communication card. • Inspect or repair the drive.

10. 4. Control - Command

On the graphic display terminal only, the [1.2 - MONITORING] menu ([COMMUNICATION MAP] submenu) can be used to display control-signal diagnostic information between the drive and the master:

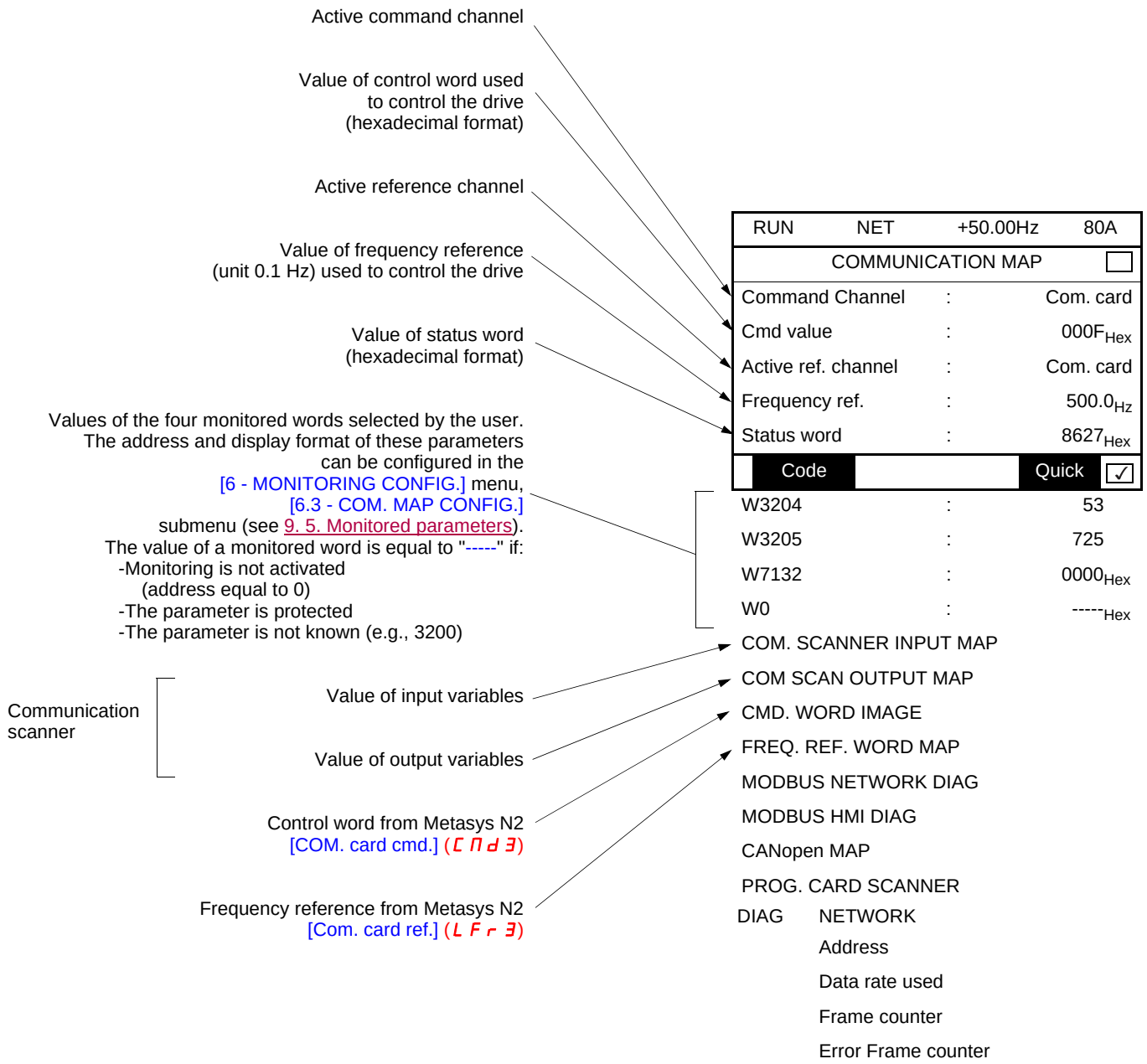

10. 5. Communication scanner

On the graphic display terminal, in the [1.2 - MONITORING] (SUP -) menu ([COMMUNICATION MAP] (CMM -) submenu):

- The [COM. SCANNER INPUT MAP] (ISA -) submenu is used to display the value of the 8 communication scanner input variables [Com Scan In● val.] (NM●).
- The [COM SCAN OUTPUT MAP] (OSA -) submenu is used to display the value of the 8 communication scanner output variables [Com Scan Out● val.] (NC●).

Input variable	Scanner parameter
No. 1	[Com Scan In1 val.] (NM1)
No. 2	[Com Scan In2 val.] (NM2)
No. 3	[Com Scan In3 val.] (NM3)
No. 4	[Com Scan In4 val.] (NM4)
No. 5	[Com Scan In5 val.] (NM5)
No. 6	[Com Scan In6 val.] (NM6)
No. 7	[Com Scan In7 val.] (NM7)
No. 8	[Com Scan In8 val.] (NM8)

Output variable	Scanner parameter
No. 1	[Com Scan Out1 val.] (NC1)
No. 2	[Com Scan Out2 val.] (NC2)
No. 3	[Com Scan Out3 val.] (NC3)
No. 4	[Com Scan Out4 val.] (NC4)
No. 5	[Com Scan Out5 val.] (NC5)
No. 6	[Com Scan Out6 val.] (NC6)
No. 7	[Com Scan Out7 val.] (NC7)
No. 8	[Com Scan Out8 val.] (NC8)

Configuration of these variables is described in the "Configuration" section.

Example of communication scanner display on the graphic display terminal:

RUN	NET	+50.00Hz	80A
COM. SCANNER INPUT MAP			
Com Scan In1 val.	:		34359
Com Scan In2 val.	:		600
Com Scan In3 val.	:		0
Com Scan In4 val.	:		0
Com Scan In5 val.	:		0
Code		Quick	✓
Com Scan In6 val.	:		0
Com Scan In7 val.	:		0
Com Scan In8 val.	:		0

RUN	NET	+50.00Hz	80A
COM SCAN OUTPUT MAP			
Com Scan Out1 val.	:		15
Com Scan Out2 val.	:		598
Com Scan Out3 val.	:		0
Com Scan Out4 val.	:		0
Com Scan Out5 val.	:		0
Code		Quick	✓
Com Scan Out6 val.	:		0
Com Scan Out7 val.	:		0
Com Scan Out8 val.	:		0

In this example, only the first two variables have been configured (default assignment).

[Com Scan In1 val.] = [34343] Status word = 34359 = 16#8637 ➜ Drivecom "Operation enabled" state, reverse operation, speed reached

[Com Scan In2 val.] = [600] Output speed = 600 ➜ 600 rpm

10. 6. Communication fault

Metasys N2 communication faults are indicated by the red ERR LED on the Metasys N2 card.

In the factory default configuration, a communication time-out fault will trigger a resettable [Com. network] (CnF) drive fault and initiate a freewheel stop.

It is possible to change the response of the drive in the event of a Metasys N2 communication fault (see the Configuration section).
- [Com. network] (CnF) drive fault (freewheel stop, stop on ramp, fast stop or DC injection braking stop)
- No drive fault (stop, maintain, fallback)

The Parameters Manual contains a detailed description of how to manage communication faults (see the "Communication monitoring" section).
- Following initialization (power-up), the drive checks that at least one command or reference parameter has been written for the first time by Metasys N2.
- Then, if a communication fault occurs on Metasys N2, the drive will react according to the configuration (fault, maintain, fallback, etc.).

10. 7. Card fault

The [internal com. link] (ILF) fault appears when the following serious problems occur:
- Hardware fault on the Metasys N2 card
- Dialog fault between the Metasys N2 card and the drive

The response of the drive in the event of an [internal com. link] (ILF) fault cannot be configured, and the drive trips with a freewheel stop. This fault cannot be reset.

Two diagnostic parameters can be used to obtain more detailed information about the origin of the [internal com. link] (ILF) fault:
- [Internal link fault 1] (ILF1) if the fault has occurred on option card no. 1 (installed directly on the drive)
- [Internal link fault 2] (ILF2) if the fault has occurred on option card no. 2 (installed on top of option card no. 1)

The Metasys N2 card can be in position 1 or 2.

The [Internal link fault 1] (ILF1) and [Internal link fault 2] (ILF2) parameters can only be accessed on the graphic display terminal in the [1.10 DIAGNOSTICS] (DGt-) menu, [MORE FAULT INFO] (AF1-) submenu.

Value	Description of the values of the [Internal link fault 1] (ILF1) and [Internal link fault 2] (ILF2) parameters
0	No fault
1	Loss of internal communication with the drive
2	Hardware fault detected
3	Error in the EEPROM checksum
4	Faulty EEPROM
5	Faulty Flash memory
6	Faulty RAM memory
7	Faulty NVRAM memory
8	Faulty analog input
9	Faulty analog output
10	Faulty logic input
11	Faulty logic output
101	Unknown card
102	Exchange problem on the drive internal bus
103	Time out on the drive internal bus (500 ms)

11. Network objects

11. 1. List of type supported by ATV61

- Drive I/O
- Control
- Parameters access
- Identification

■ Binary input points

Binary input point summary

The following table summarizes the binary input points supported:

Point Names	ATV61	ID	Description
RO 1 ACT	R1	1	Indicates status of relay R1
RO 2 ACT	R2	2	Indicates status of relay R2
DI 1 ACT	LI1	3	Value of LI1
DI 2 ACT	LI2	4	Value of LI2
DI 3 ACT	LI3	5	Value of LI3
RUNSTOP		6	Indicates the drive status
FWDREV		7	Indicates the motor rotation direction (0:forward, 1:reverse)
FAULT		8	Indicates the drive's fault status
HANDAUTO		9	Indicates if the drive is locally controlled or not (0:AUTO, 1:HAND).
MAINTREQ		10	Associated with "controller inside" option board
DRIVEREADY		11	The VSD is ready and waits a start command.
ATSETPOINT		12	The VSD has reached the target speed
RO 3 ACT	R3	13	Indicates status of relay R3 (1)
RO 4 ACT	R4	14	Indicates status of relay R4 (2)
RO 5 ACT	Reserved	15	
RO 6 ACT	Reserved	16	
DI 4 ACT	LI4	17	Value of LI4
DI 5 ACT	LI5	18	Value of LI5
DI 6 ACT	LI6	19	Value of LI6
DI 7 ACT	LI7	20	Value of LI7 (1)
DI 8 ACT	LI8	21	Value of LI8 (1)
DI 9 ACT	LI9	22	Value of LI9 (1)
DI 10 ACT	LI10	23	Value of LI10 (1)
DI 11 ACT	LI11	24	Value of LI11 (2)
DI 12 ACT	LI12	25	Value of LI12 (2)
DI 13 ACT	LI13	26	Value of LI13 (2)
DI 14 ACT	LI14	27	Value of LI14 (2)
DI 15 ACT	LO1	28	Indicates status of logic output (1)
DI 16 ACT	LO2	29	Indicates status of logic output (1)

(1) Logic I/O option card terminals (VW3 A3 201)
(2) Extended I/O option card terminals (VW3 A3 202)

■ Binary output points

Binary output point summary

The following table summarizes the binary output points supported:

Point Names	ID	Description	
RO1 CMD	1	R1 relay out accessible if not assigned	
RO2 CMD	2	R2 relay out accessible if not assigned	
RUNSTOPCMD	3	Commands a drive start	
FWDREVCMD	4	Commands a motor direction's change	
FAULTRESET	5	Resets fault	
MBOXREAD	6	Command to read parameter	
MBOXWRITE	7	Command to write parameter	
C311CMD	8	Writes C311	These bits are freely assignable to various functions. For more information please refer to the ATV61 programming manual.
C312CMD	9	Writes C312	
C313CMD	10	Writes C313	
C314CMD	11	Writes C314	
C315CMD	12	Writes C315	
RO3 CMD	13	R3 relay out accessible if not assigned(1)	
RO4 CMD	14	R4 relay out accessible if not assigned(2)	
RO5 CMD	15	reserved	
RO6 CMD	16	reserved	
RO7 CMD	17	LO1 logic output accessible if not assigned (1)	
RO8 CMD	18	LO2 logic output accessible if not assigned (1)	

(1) :Logic I/O option card terminals (VW3 A3 201)
(2) :Extended I/O option card terminals (VW3 A3 202)

■ Analog inputs

ID	Point Names	Description (Code)	Units
1	OUTPUTSPEED	Output speed	rpm
2	OUTPUTFREQ	Output frequency	Hz
3	DCBUSVOLT	DC bus voltage	V
4	OUTPUTVOLT	Motor voltage	V
5	CURRENT	Motor current	A
6	TORQUE	Motor Torque	%
7	POWER	Motor Power	%
8	DRIVETEMP	Drive Thermal State	%
9	KWH	Energy counter	KWh
10	RUNTIME	Operating time	H
11	LASTFLT	Error code	-
12	PREVFLT1	Previous fault (occurred before LASTFLT)	-
13	PREVFLT2	Previous fault (occurred before PREVFLT1)	-
14	MBOXVALUEREAD	Parameter read value	-
15	AI1ACT	Analog input value 1	-
16	AO1ACT	Analog output 1 level	%
17	AI2ACT	Analog input value 2	-
18	AI3ACT (1)	Analog input value 3	-
19	AI4ACT (1)	Analog input value 4	-
20	AI5ACT	Analog input value 5	-
21	AO2ACT (1)	Analog output 2 level	%
22	AO3ACT (1)	Analog output 3 level	%
23	PRCPIDFBCK	PID regulator feedback	%
24	PRCPIDDEV	PID regulator deviation	%
25	COMSCANIN1	General purpose AV ← Comm. Scan.	-
26	COMSCANIN2	General purpose AV ← Comm. Scan.	-
27	COMSCANIN3	General purpose AV ← Comm. Scan.	-
28	COMSCANIN4	General purpose AV ← Comm. Scan.	-
29	COMSCANIN5	General purpose AV ← Comm. Scan.	-
30	COMSCANIN6	General purpose AV ← Comm. Scan.	-
31	COMSCANIN7	General purpose AV ← Comm. Scan.	-
32	COMSCANIN8	General purpose AV ← Comm. Scan.	-

(1) : Extended I/O option card terminals (VW3 A3 202)

■ Analog outputs

ID	Point Names	Description (Code)	Units
1	INPUTREF	Speed reference from Bus	%(2)
2	ACCELTIME	Acceleration time	s
3	DECELTIME	Deceleration time	s
4	MBOXPARAM	Parameter number	-
5	MBOXVALUEWRITE	Parameter writing value	-
6	AO1CMD	Analog 1 output value	-
7	AO2CMD (1)	Analog 2 output value	-
8	AO3CMD (1)	Analog 3 output value	-
9	AO4CMD (1)	Analog 4 output value	-
10	EXTPIDSTPT	PID regulator setpoint via the Bus	%
11	COMSCANOUT1	General purpose AV ➡ Comm. Scan.	-
12	COMSCANOUT2	General purpose AV ➡ Comm. Scan.	-
13	COMSCANOUT3	General purpose AV ➡ Comm. Scan.	-
14	COMSCANOUT4	General purpose AV ➡ Comm. Scan.	-
15	COMSCANOUT5	General purpose AV ➡ Comm. Scan.	-
16	COMSCANOUT6	General purpose AV ➡ Comm. Scan.	-
17	COMSCANOUT7	General purpose AV ➡ Comm. Scan.	-
18	COMSCANOUT8	General purpose AV ➡ Comm. Scan.	-

(1) Extended I/O option card terminals (VW3 A3 202)
(2) Range between 0 and **tFr.**

12. Network objects

12. 1. Additional functions

Besides the services of “datasharing” the communication card provides the following functions.

■ Sync time command

This command is not supported by the VSD, the VSD will return a normal response : <A>,<CR>.

■ Status update request

The form and the version information of connected VSD are returned:

Example:
CHAR 1 Start of message : <A>
CHAR16 Model number : <ATV61XXXXXXXXXX>
CHAR4 Days in service : <0000>
CHAR4 Device status : <0108>
CHAR2 Checksum : <XX>
CHAR1 End of message : CR

■ Identify Device Type Command

This message is sent by the N2 controller, The VSD will start to respond to the request only if it had received this message.
This message requests the N2 device to respond with a unique code identifying which kind of N2 device it is.

Command:
CHAR1 command <F>

Response:
CHAR 1 Start of message : <A>
CHAR2 Device code : <10H>
CHAR2 Checksum : <XX>
CHAR1 End of message : CR

■ Full parameters access

By the use of indirect access, it is possible to read or write any of the internal parameters of the VSD.
This functionality is assured by these four objects:

MBOXPARAM, MBOXREAD, MBOXWRITE, MBOXDATAREAD, MBOXDATAWRITE.

• Reading

Write the logic address of the parameter to the present value property of the object MBOXPARAM.
Set present value property of the object MBOXREAD to “read”.
The current value of the parameter can be read in the present value property of MBOXVALUEREAD.

• Writing a parameter

Write the logic address of the parameter to the present value property of the object MBOXPARAM.
Write the new value in the present value property of the object MBOXWRITE.
Set present value property of the object MBOXVALUEWRITE to “write”.

Note: MBOXREAD and MBOXWRITE automatically return back to inactive once command sent. Always return 0 when read.

Important note: The modified parameters are not saved in EEPROM non-volatile memory, If you want to do this, you need to specify it by writing the CMI bit 1 to 1. The command is only active if the drive is stopped.

■ Freely assignable objects

The binary value objects correspond to bits (C311 to C315) within the ATV.
By default these bits are not used, but it is possible to assign them to an additional function. The HMI (or the commissioning software) must be used to configure the use of these objects.

The details of the assignment possibilities of these bits are explained in the “Programming manual”.